Optizone

# Optical Component and Module

Optizone Technology (Shenzhen) Limited

COMPANY PROFILE

# About Us

- Founded in 2007, Shenzhen, China
- Covering an area of 9,800 ㎡ with workshop and clean room
- National high-tech enterprise integrating R&D, production and marketing of optical components.
- Engineering and R&D Center for polarization maintaining & high power components in Guangdong province.
- Shenzhen Postdoctoral Innovation Practice Base.
- Pioneer of high power optical isolator volume production in China.
- Provide optical module for quantum communication "Micius" project.
- Large-scale R&D and production base for high power fiber optical cable in China.
- Specific R&D and production base in ultrafast laser passive components.

# Content

# Optizone Product Matrix Table

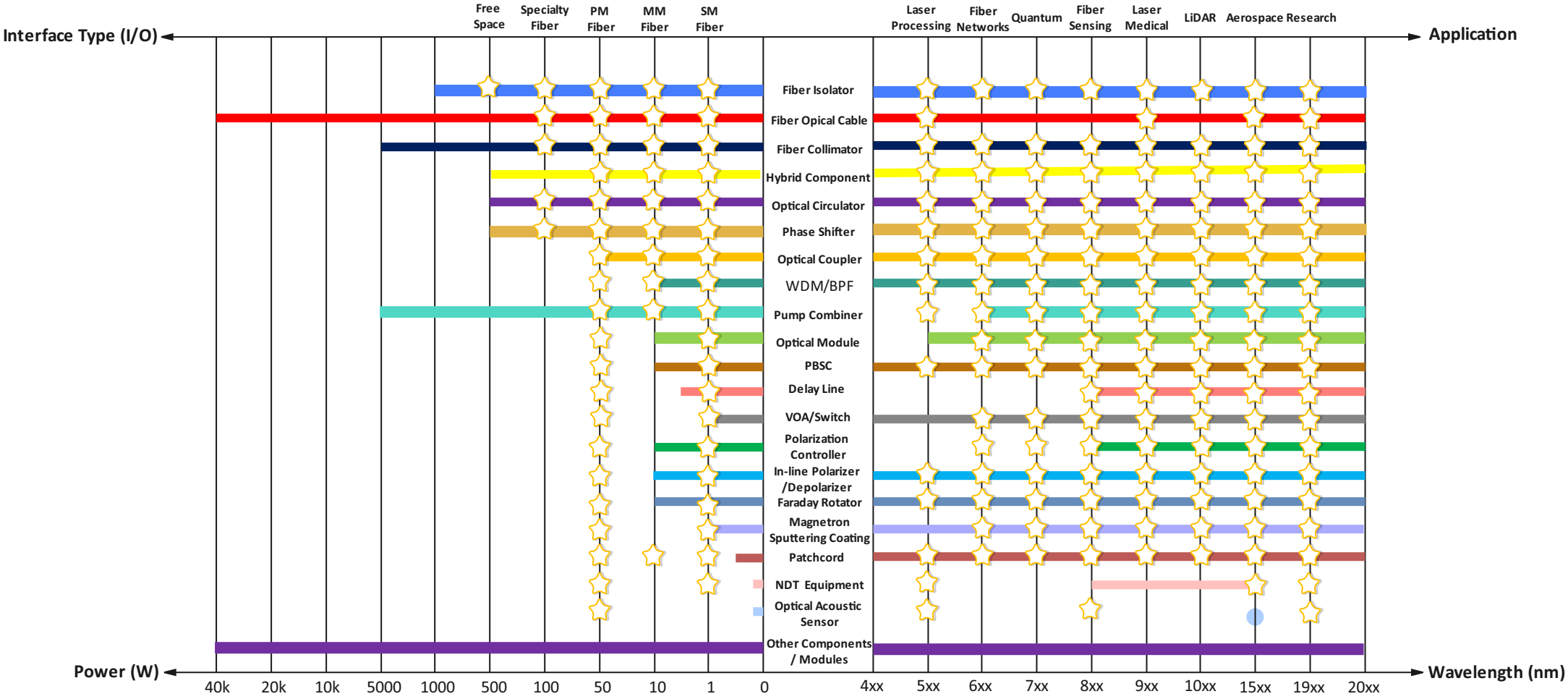


**Remark:**

1. **All product sizes can be customized. For customization requests, please contact our marketing or sales representatives.**
2. **Power and Wavelength Range**

   **Applicable Interface Types (I/O) and Application Scenarios**

Tips: Copy the spec to search and jump within the PDF.

| Fiber Isolator | | | | |
|---|---|---|---|---|
| **Product** | **Wavelength** | **Power** | **PM Spec NO.** | **Non-PM Spec NO.** |
| **In-Line Isolator (PII/PMI/HPII/HPMI)** | 5xx nm | 1W | SR2003002A | |
| | 6xx nm | 1W | SR2410014A | SR1709008B |
| | 7xx nm | 1W | SR1502002B | CAT-05-001G |
| | 8xx nm | 1W | SR2202017B | CAT-05-001G |
| | 9xx nm | 1W | CAT-05-006I | CAT-05-002H |
| | 10xx nm | 300mW | CAT-09-026C<br>CAT-011-003B | CAT-07-003C |
| | | 1W | CAT-05-064D<br>SR2401051D | CAT-05-063C<br>SR2406027A |
| | | 10W | SR2401051D | SR2406027A |
| | | 50W | SR2403056A | SR2405001A |
| | | 100W | SR2403056A | SR2405001A |
| | | 500W | SR2405036A | SR2406043A |
| | | 1000W | | SE2312011B |
| | 15xx nm | 1W | CAT-05-008E | CAT-05-004G |
| | | 10W | CAT-05-008E | CAT-05-004G |
| | 19xx nm | 1W | CAT-10-013D | CAT-05-057C |
| | | 10W | CAT-10-018C | CAT-05-057C |
| | 20xx nm | 1W | CAT-10-013D | CAT-05-057C |
| | | 10W | CAT-10-018C | CAT-05-057C |
| **Collimated Beam Output Isolator (HPICI)** | 10xx nm | 5W | SR2311093A | SR1505002C |
| | | 20W | SR2311031A | SR2208010C |
| | | 50W | SR2304019A | |
| | | 100W | SR2208063B | |
| | | 250W | SR2412068A | |
| | | 500W | SR2311054A | SR2406046A |
| | | 1000W | | SR2405032A |
| | | 10W | SR2311093A | SR1505002C |
| | | 20W | | SR2208009C |
| | | 20W（Dual Stage） | SR2209005A | SR1406007B |
| | | 200W | | SR2405009A |
| | | 250W | | SR2303001E |
| | | 350W | | SR2406045A |
| | | 500W | SR2311054A | SR2406046A |
| | | 1000W | | SR2405032A |
| **Free Space Isolator** | 4xx nm | 500mW | SR2308074A | |
| | 7xx nm | 100mW | SR2407040A | |

| | | | | |
|---|---|---|---|---|
| **(HPFSI/FSI)** | 10xx nm | 10W | SR2407012A | |
| | | 300W | SR2207036A | |
| | | 500W | SR2304040A | |
| | 15xx nm | 500mW | CAT-07-001G | |
| | 19xx~20xx nm | 500mW | CAT-10-017C | |
| **Faraday Rotator (HPFR/FR)** | 4xx ~11xx nm | 100mW | | |
| | | 500mW | | |
| | | 10W | SR2401034A | |
| | | 150W | SR2201014A | |
| | | 500W | SR2404056A | |

| **Fiber Optical Cable** | | | |
|---|---|---|---|
| **Product** | **Wavelength** | **Power** | **Spec No.** |
| **Air-cooled Fiber Endcap （AFE)** | 4xx nm | 100W | SR1811035C |
| | 5xx nm | 100W | SR1811035C |
| | 9xx nm | 500W | SR1811035C |
| | 10xx nm | 500W | SR1811035C |
| | 15xx nm | 100W | SR1811035C |
| | 19xx nm | 500W | SR2310010A |
| | 20xx nm | 500W | SR2310010A |
| **Fiber Optical Cable (Indirectly Water-cooling) (Kilowatt Level) （QBH）** | 4xx nm | 500W | SR2105026A |
| | 5xx nm | 500W | SR2204021A |
| | 9xx nm | 500W | SR2204021A |
| | 10xx nm | 2000W | SR2204021A |
| | | 4000W | SR2208019A |
| | | 6000W | SR2011013B |
| | 19xx nm | 1000W | SR2501002A |
| | 20xx nm | 1000W | SR2501002A |
| **Fiber Optical Cable (Indirectly Water-cooling) (10 Kilowatt Level) （QD）** | 10xx nm | 20000W | CAT-05-081B |
| **Fiber Optical Cable (Indirectly Water-cooling) (10 Kilowatt Level) （Q+）** | 10xx nm | 40000W | CAT-05-090A |
| **Ultrafast Laser Cable Connector （ULC)** | 5xx nm | 100W | SE2407005A |
| | 10xx nm | 200W | SR2006006C |

| | | | |
|---|---|---|---|
| **Large Beam Collimator（QCS)** | 9xx nm | 100W | SR2307010A |
| | 10xx nm | 5~100W | SR2209049A<br>SR2305087A |
| | | 300W | |
| | | 500W | SR2106040C |
| | | 600W | SR2401042A |
| | | 700W | SR2310030C |
| | | 1000W | SR2408038A |
| | | 3000W | SR2201010B |
| | 19xx nm | 50W | SR2003008A |
| | 20xx nm | 200W | SR2403016A |
| **High Power Polarization Maintaining Fiber Collimator（HPMC）** | 10xx nm | 50W | SR2002012A |
| | | 200W | SR2011016E |

| **Optical Coupler** | | | | |
|---|---|---|---|---|
| **Product** | **Wavelength** | **Power** | **PM Spec NO.** | **Non-PM Spec NO.** |
| **Single Mode Filter Coupler（FC/PMFC)** | 5xx nm | 300mW | | |
| | 6xx nm | 300mW | | |
| | 7xx nm | 300mW | | SR1407001C |
| | 8xx nm | 300mW | | SR1407001C |
| | 9xx nm | 300mW | | CAT-10-028B |
| | 10xx nm | 500mW | CAT-09-017C<br>CAT-09-018D | CAT-10-028B |
| | | 5W | CAT-05-045D | CAT-10-028B |
| | | 10W | CAT-05-045D | |
| | 15xx nm | 500mW | CAT-09-019C | CAT-10-028B |
| | | 5W | CAT-05-046C | CAT-10-028B |
| | | 10W | CAT-05-046C | |
| | 19xx nm | 500mW | CAT-05-059B | CAT-10-028B |
| | | 5W | CAT-05-059B | CAT-10-028B |
| | | 10W | CAT-05-059B | CAT-10-028B |
| | 20xx nm | 500mW | CAT-10-015C | |
| | | 5W | CAT-05-059B | |
| | | 10W | CAT-05-059B | |
| **Single Mode Standard Coupler (SMC/PMSMC)** | 4xx nm | 100mW | SR2411043A | SR1809010B |
| | 5xx nm | 200mW | SR2411043A | SR1809010B |
| | 6xx nm | 300mW | SR2109020A | SR2402018A |

| | | | | |
|---|---|---|---|---|
| | | | | SR1809012A |
| | 7xx nm | 300mW | SR2202013A | SR2310034A |
| | 8xx nm | 300mW | SR2202013A | SR2310034A |
| | 9xx nm | 300mW | CAT-03-021C | CAT-03-012C |
| | 10xx nm | 500mW | CAT-03-021C | CAT-03-012C |
| | | 20W | CAT-03-015C | CAT-03-016B |
| | | 50W | CAT-03-015C | CAT-03-016B |
| | 15xx nm | 500mW | CAT-03-021C | CAT-03-005F |
| | | 20W | CAT-03-015C | CAT-03-016B |
| | | 50W | CAT-03-015C | CAT-03-016B |
| | 19xx nm | 500mW | CAT-03-021C | CAT-03-005F |
| | | 20W | CAT-03-015C | CAT-03-016B |
| | | 50W | CAT-03-015C | CAT-03-016B |
| | 20xx nm | 500mW | CAT-03-021C | CAT-03-005F |
| | | 20W | CAT-03-015C | CAT-03-016B |
| | | 50W | CAT-03-015C | CAT-03-016B |
| **Multi-Mode Standard Coupler (MMSMC)** | 8xx nm | 300mW~30W | | CAT-03-014B |
| | 9xx nm | 300mW~30W | | CAT-03-014B |
| | 9xx nm | 300mW~30W | | CAT-03-014B |
| | 10xx nm | 300mW~30W | | CAT-03-014B |
| | 14xx nm | 300mW~30W | | CAT-03-014B |

| WDM/BPF | | | | | |
|---|---|---|---|---|---|
| **Product** | **Wavelength** | **Power** | **Bandwidth** | **PM Spec NO.** | **Non-PM Spec NO.** |
| **Filter WDM (FWDM)** | 980/1550nm | 300mW | Customized | CAT-09-032D | CAT-04-010D |
| | | 10W | Customized | CAT-05-048C | CAT-05-041C<br>CAT-05-043C |
| | 976/1064nm | 300mW | Customized | CAT-11-001B<br>CAT-05-049C | CAT-04-012C |
| | | 10W | Customized | CAT-11-001B<br>CAT-05-049C | CAT-05-042C |
| | 1310/1550nm | 300mW | Customized | CAT-09-024D | CAT-04-010D |
| | | 10W | Customized | CAT-05-047C | CAT-05-041C<br>CAT-05-043C |

| | | | | | |
|---|---|---|---|---|---|
| | 1480/1550nm | 300mW | Customized | CAT-09-024D | CAT-04-010D |
| | | 10W | Customized | CAT-05-047C | CAT-05-041C<br>CAT-05-043C |
| | 1510/1550nm | 300mW | Customized<br>/0.22nm/0.5nm | CAT-09-024D | CAT-04-010D |
| | | 10W | Customized | CAT-05-047C | CAT-05-041C<br>CAT-05-043C |
| | 1570/2000nm | 300mW | Customized<br>/0.22nm/0.5nm | CAT-10-016E | CAT-10-012D |
| | | 10W | Customized | CAT-05-060C | CAT-05-056C |
| **Fused WDM (WDM)** | 980/1550nm | 300mW | ±15 | | CAT-03-008F |
| | | 10W | ±15 | | CAT-03-008F |
| | 976/1064nm | 300mW | ±5 | | CAT-03-010D |
| | | 10W | ±5 | | CAT-03-010D |
| | 1310/1550nm | 300mW | ±15 | | CAT-03-007E |
| | | 10W | ±15 | | CAT-03-007E |
| | 1480/1550nm | 300mW | ±5 | | CAT-03-013C |
| | | 10W | ±5 | | CAT-03-013C |
| **Band Pass Filter (BPF)** | 980nm | 300mW | Customized | SR0712014D<br>（Pump）<br>SR2305042A(Band pass) | SR2303059B |
| | | 10W | Customized | | SR2306105A<br>（Pump） |
| | 1030~1064nm | 300mW | Customized | SR2301721A | SR1409012B |
| | | 10W | Customized | SR2401054A | SR2307043A |
| | 1550nm | 300mW | Customized | SR0902011C | SR0803010B |
| | | 10W | Customized | SR2305028A | SR2306113A |

| Optical Circulator | | | | |
|---|---|---|---|---|
| **Product** | **Wavelength** | **Power** | **PM Spec NO.** | **Non-PM Spec NO.** |
| **Optical Circulator (FCIR)** | 7xx nm | 300mW | SR1905009B | |
| | 8xx nm | 300mW | SR2107003B | CAT-05-076B |
| | 10xx nm | 300mW | CAT-09-013D<br>CAT-09-012D | CAT-02-003F |
| | | 300mW | SR2309018A | SR2502003A |
| | | 300mW | SR2409011B | |
| | | 10W | SR2309018A | SR2502003A |
| | | 50W | SR2309018A | SR2502003A |

| | | | | |
|---|---|---|---|---|
| | 15xx nm | 500mW | CAT-09-015E<br>CAT-09-014D | CAT-02-002E |
| | | 10W | SR2302514A | SR2302501A |
| | 19xx nm | 300mW | CAT-10-020C | SR1812009B |
| | | 10W | CAT-05-067C | SR1812009B |
| | 20xx nm | 300mW | CAT-10-020C<br>CAT-10-034B | SR1812009B |
| | | 10W | CAT-05-067C | SR1812009B |

| Optical Collimator | | | | | | |
|---|---|---|---|---|---|---|
| **Product** | **Wavelength** | **Power** | **Lens Diameter** | **Operation Distance** | **PM Spec NO.** | **Non-PM Spec NO.** |
| **Optical Collimator ( C )** | 9xx nm | 300mW | 1.8mm | 0~300mm | CAT-10-002C | CAT-10-001C |
| | | 10W | 1.8mm | 0~300mm | CAT-05-014E | CAT-05-013D |
| | 10xx nm | 300mW | 1.8mm | 0~300mm | CAT-10-002C | CAT-10-001C |
| | | 10W | 1.8mm | 0~300mm | CAT-05-014E | CAT-05-013D |
| | 15xx nm | 300mW | 1.8mm | 0~300mm | CAT-09-011C | CAT-10-002C |
| | | 10W | 1.8mm | 0~300mm | SR2108006B | CAT-05-018C |
| | 19xx nm | 300mW | 1.8mm | 0~300mm | SR1801011A | SR2412072A |
| | | 10W | 1.8mm | 0~300mm | SR1310002B | SR2208016A |
| | 20xx nm | 300mW | 1.8mm | 0~300mm | SR1801011A | SR2412072A |
| | | 10W | 1.8mm | 0~300mm | SR1310002B | SR2208016A |

| In-line Polarizer | | | |
|---|---|---|---|
| **Product** | **Wavelength** | **Power** | **Spec No.** |
| **In-line Polarizer (ILP)** | 8xx nm | 300mW | CAT-09-035D |
| | 10xx nm | 300mW | CAT-09-002D |
| | | 10W | SR0806012D |
| | 15xx nm | 300mW | CAT-09-003E |
| | | 10W | CAT-05-015D |
| | 19xx nm | 300mW | CAT-10-019C |
| | | 10W | SR2305031A |

| Hybrid Component | | | |
|---|---|---|---|
| **Product** | **Wavelength** | **Power** | **Spec No.** |
| **Isolator Hybrid With Polarization Beam Splitter/Combiner (Isolator+PBSC)** | 10xx nm | 300mW | CAT-09-004C<br>SR2405019B |
| | | 10W | SR2311086A |
| | 15xx nm | 300mW | CAT-09-005C |
| | | 10W | CAT-05-051C |
| | 19xx nm | 300mW | CAT-09-005C |
| | | 10W | CAT-05-051C |
| **Isolator Hybrid With Tap (Isolator+TAP)** | 10xx nm | 300mW | CAT-11-008B<br>SR2405019B |
| | | 10W | SR2311086A |
| | 15xx nm | 300mW | CAT-09-030C |
| | | 10W | CAT-05-054C |
| | 19xx nm | 300mW | CAT-09-030C |
| | | 10W | CAT-05-054C |
| **Isolator Hybrid With WDM (Isolator+WDM)** | 10xx nm | 300mW | SR1008020B |
| | | 10W | SR2311069A |
| | 15xx nm | 300mW | CAT-09-028F |
| | | 10W | CAT-05-050D |
| | 19xx nm | 300mW | |
| | | 10W | |
| **Isolator Hybrid With Band Pass Filter (Isolator+BPF)** | 10xx nm | 300mW | SR2307100A |
| | | 10W | SR2407025A |
| | 15xx nm | 300mW | SR2409013A |
| | | 10W | SR2408020A |
| | 19xx nm | 300mW | |
| | | 10W | |
| **Isolator Hybrid With Tap and WDM (Isolator+TAP+WDM )** | 10xxnm | 300mW | SR2312026A |
| | 15xxnm | 300mW | CAT-09-031F |
| | | 10W | SR2301703B |
| | 19xxnm | 300mW | SR1708030B |
| | | 10W | SR1708030B |

| PBCS | | | |
|---|---|---|---|
| **Product** | **Wavelength** | **Power** | **Spec No.** |
| **Polarization Beam Splitter** | 10xx nm | 300mW | CAT-09-007D |
| | | 10W | CAT-05-052C |
| | 15xx nm | 300mW | CAT-09-009D |
| | | 10W | CAT-05-053C |
| | 19xx nm | 300mW | CAT-10-014D |
| | | 10W | CAT-05-055C |
| **Polarization Beam Combiner** | 10xx nm | 300mW | CAT-09-007D |
| | | 10W | CAT-05-052C |
| | 15xx nm | 300mW | CAT-09-009D |
| | | 10W | CAT-05-053C |
| | 19xx nm | 300mW | CAT-10-014D |
| | | 10W | CAT-05-055C |

| VOA | | | | |
|---|---|---|---|---|
| **Product** | **Wavelength** | **Power** | **PM Spec NO.** | **Non-PM Spec NO.** |
| **Variable Optical Attenuator (VOA)** | 10xx nm | 300mW | CAT-09-045D | CAT-10-026D |
| | | 1W | CAT-09-045D | CAT-10-026D |
| | 15xx nm | 300mW | CAT-09-045D | CAT-10-026D |
| | | 1W | CAT-09-045D | CAT-10-026D |
| | 19xx nm | 300mW | CAT-09-045D | CAT-10-026D |
| | | 1W | CAT-09-045D | CAT-10-026D |

| Faraday Rotator | | | | |
|---|---|---|---|---|
| **Product** | **Wavelength** | **Power** | **PM Spec NO.** | **Non-PM Spec NO.** |
| **Faraday Mirror (FM)** | 10xx nm | 300mW | CAT-09-022B | CAT-10-003B |
| | 15xx nm | 300mW | CAT-09-023B | CAT-10-004B |
| **Optical Fiber Mirror (OFM)** | 10xx nm | 300mW | CAT-09-034B | CAT-10-005B |
| | 15xx nm | 300mW | CAT-09-033B | CAT-10-006B |

| Patchcord | | | | | |
|---|---|---|---|---|---|
| **Product** | **Wavelength** | **Power** | **Connector** | **PM Spec NO.** | **Non-PM Spec NO.** |
| **Single Mode Patchcord** | 10xx nm | 300mW | FC/UPC, FC/APC, SC/UPC, SC/APC, LC/UPC, LC/APC | CAT-09-029D | CAT-10-007C |
| | 15xx nm | 300mW | FC/UPC, FC/APC, SC/UPC, SC/APC, LC/UPC, LC/APC | CAT-09-029D | CAT-10-007C |
| **Multi-mode Patchcord** | 9xx nm | 300mW | FC/UPC, FC/APC, SC/UPC, SC/APC, LC/UPC, LC/APC | CAT-09-029D | CAT-10-007C |
| | 10xx nm | 300mW | FC/UPC, FC/APC, SC/UPC, SC/APC, LC/UPC, LC/APC | CAT-09-029D | CAT-10-007C |
| | 15xx nm | 300mW | FC/UPC, FC/APC, SC/UPC, SC/APC, LC/UPC, LC/APC | CAT-09-029D | CAT-10-007C |
| **PM Patchcord** | 9xx nm | 300mW | FC/UPC, FC/APC, SC/UPC, SC/APC, LC/UPC, LC/APC | CAT-09-029D | CAT-10-007C |
| | 10xx nm | 300mW | FC/UPC, FC/APC, SC/UPC, SC/APC, LC/UPC, LC/APC | CAT-09-029D | CAT-10-007C |
| | 15xx nm | 300mW | FC/UPC, FC/APC, SC/UPC, SC/APC, LC/UPC, LC/APC | CAT-09-029D | CAT-10-007C |

| Delay Line | | | | | |
|---|---|---|---|---|---|
| **Product** | **Wavelength** | **Power** | **Delay Range** | **Movement Distance** | **Spec No.** |
| **Variable Optical Delay Line (VDL)** | 10xx nm | 300mW~5W | 300ps/530ps | 4cm/8cm | CAT-10-031B |
| | 15xx nm | 300mW~5W | 300ps/530ps | 4cm/8cm | CAT-10-031B |
| **Variable Optical Delay Line (VDL)** | 10xx nm | 300mW~5W | 300ps/530ps | 4cm | CAT-10-031B |
| | 15xx nm | 300mW~5W | 300ps/530ps | 4cm | CAT-10-031B |

| Optical Module | | | |
|---|---|---|---|
| **Product** | **Wavelength** | **Power** | **Spec No.** |
| **Quantum Key Distribution Module(QKD)** | 8xx nm | 300mW | SE1906001D |
| | 15xx nm | 500mW | SR2312009A |
| **Filter Coupler Module (FCM)** | 8xx nm | 300mW | SR1707005B |
| | | 10W | SR1707005B |
| | 10xx nm | 500mW | CAT-09-020B |
| | | 10W | CAT-09-020C |
| | 15xx nm | 500mW | SR2302521A (SM)<br>SR2209066B (PM) |
| | | 500mW | CAT-09-021C |
| | | 10W | CAT-09-021C |

| Pump Combiner | | | | | | | | |
|---|---|---|---|---|---|---|---|---|
| **Product** | **Type** | **Power/ Port** | **Pump Wavelength** | **Signal Wavelength** | **Pump Fiber** | **Input Fiber** | **Output Fiber** | **Spec No.** |
| **1μm PM Combiner (PMMPC)** | (1+1)x1 | 10W | 9xx nm | 10xx nm | 105/125 0.22 | PM-GDF-5/130 | PM-GDF-5/130 | SR2310052A |
| | (2+1)x1 | 30W | 9xx nm | 10xx nm | 105/125 0.22 | PLMA-GDF-10/125-M | PLMA-GDF-10/125-M | SR2205021A |
| | (2+1)x1 | 70W | 9xx nm | 10xx nm | 105/125 0.22 | PLMA-GDF-10/125-M | PLMA-GDF-25/250-M | SR2501036A |
| | (6+1)x1 | 50W | 9xx nm | 10xx nm | 105/125 0.22 | PLMA-GDF-15/130 NA0.08 | PLMA-GDF-15/130 NA0.08 | SR2306054A |
| | (6+1)x1 | 70W | 9xx nm | 10xx nm | 105/125 0.22 | PLMA-GDF-10/125-M | PLMA-GDF-25/250 | SR2303048A |
| | (6+1)x1 | 240W | 9xx nm | 10xx nm | 135/155 0.22 | PLMA-GDF-20/400-M | PLMA-GDF-20/400-M | SR2303041B |
| **1.5μm PM Combiner (PMMPC)** | (1+1)x1 | 10W | 9xx nm | 15xx nm | 105/125 0.22 | Fujikura-SM15-PS-U25D | NUFERN PM-GDF-1550 | SR2209058B |
| | (2+1)x1 | 50W | 9xx nm | 15xx nm | 105/125 0.22 | NUFERN PM-GDF-1550 | NUFERN PM-GDF-1550 | SR2503023A |
| | (6+1)x1 | 30W | 9xx nm | 15xx nm | 105/125 0.22 | NUFERN PM-GDF-1550 | NUFERN PM-GDF-1550 | SR2502048A |
| **2.0μm PM Combiner (PMMPC)** | (1+1)x1 | 10W | 7xx nm | 19xx~20xx nm | 105/125 0.22 | PM1950 | PM-GDF-10/130-2000-M | SR2408017A |
| | (2+1)x1 | 30W | 7xx nm | 19xx~20xx nm | 105/125 0.22 | PM-GDF-10/130-2000-M | PM-GDF-10/130-2000-M | SR2405011A |
| | (6+1)x1 | 30W | 7xx nm | 19xx~20xx nm | 105/125 0.22 | PM-GDF-10/130-2000-M | PM-GDF-10/130-2000-M | SR2305051A |
| **Multi-mode Pump Combiner (MMPC)** | 3x1 | 100W | 4xx~9xx nm | | 135/135 0.22 | | 220/242 0.22 | SR2210021A |
| | 7x1 | 100W | 4xx~9xx nm | | 105/125 0.22 | | 220/242 0.22 | SR2211009A |
| | 7x1 | 400W | 4xx~9xx nm | | 200/220 0.22 | | 600/660 0.22 | |

# High Power Polarization Maintaining Isolator 5xxnm 1W

Spec Review No.: SR2003002A Date: Mar. 03, 2020

## Specifications

| Parameters | Unit | Values |
|---|---|---|
| Center Wavelength (λc) | nm | 518 or Specify |
| Operating Wavelength Range | nm | ±5 |
| Typ. Peak Isolation | dB | 30~35 |
| Min. Isolation at 23℃ | dB | 25 |
| Typ. Insertion Loss at 23℃ | dB | 1.5 |
| Max. Insertion Loss at 23℃ | dB | 1.8 |
| Min. Return Loss (Input/Output) | dB | 50/50 |
| Min. Extinction Ratio | dB | 18 (only for B-Type), 20 (only for F-Type) |
| Polarization Dependent Loss | dB | Max. 0.15(only for B-Type), Min. 20 (only for F-Type) |
| Max. Optical Power (CW) | mW | 300 or Specify |
| Max. Tensile Load | N | 5 |
| Fiber Type | - | PM460 Panda Fiber |
| Operating Temperature（Non-Condense） | ℃ | 0 to +70 |
| Storage Temperature（Non-Condense） | ℃ | -20 to +85 |

*Above specifications are for device without connector.

*For devices with connectors, IL will be 1.5dB higher, RL will be 5dB lower,ER will be 2dB lower

*For F type, fast axis is blocked, the input must be Linear polarized light, and the input polarization must be aligned properly.

*The actual package dimensions may be slightly different from that shown in below drawing, for accurate dimensions please contact Optizone.

*The material must be RoHS compliant.

## Package Dimensions

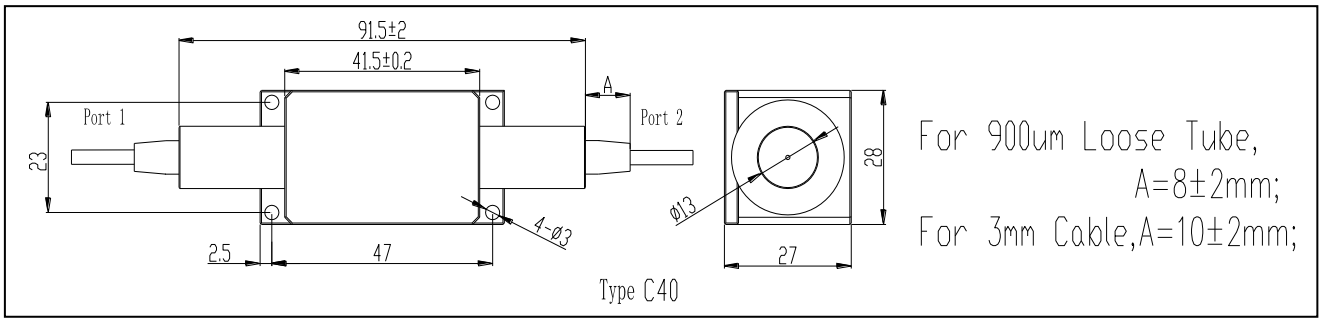


## Ordering Information

**HPMI**-①①-②②-③③-④-⑤⑤-⑥⑥-⑦

①①: Wavelength
51 - 518nm
SS - Specify

②②: Package Type
C40 - Type C40

③③: Handling Power
0.3 - 300mW
S - Specify

④: Axis Alignment
B - Both Axis Working
F - Fast Axis Blocked

⑤⑤: Connector Type on Port 1 & 2
1 - FC/UPC
2 - FC/APC
3 - SC/UPC
4 - SC/APC
N - None
S - Specify

⑥⑥: Fiber Jacket on Port 1 & 2
B - Bare Fiber
L - 900um Loose Tube
C - 3mm Loose Cable
S - Specify

⑦: Fiber Length
1 - 1.0m
S - Specify

Form No.: D05-203-05 Rev.A

# High Power Polarization Maintaining Isolator 6xxnm 1W

Spec Review No.: SR2410014A Date: Oct. 15, 2024

## Specifications

| Parameters | Unit | Values |
|---|---|---|
| Center Wavelength (λc) | nm | 610,630,650,670,690 or Specify |
| Operating Wavelength Range | nm | ±10 |
| Typ. Peak Isolation at λc,23℃ | dB | 28 |
| Min. Isolation at λc,23℃ | dB | 22 |
| Typ. Insertion Loss at at λc,23℃ | dB | 1.3 |
| Max. Insertion Loss at λc,23℃ | dB | 1.8 |
| Min. Return Loss | dB | 50 |
| Min. ER at 23℃ | dB | 20 |
| Max. Average Power @ Proper SOP | W | 0.3 or Specify |
| Max. Tensile Load | N | 5 |
| Operating Temperature | ℃ | 10 to +50 |
| Storage Temperature | ℃ | 0 to +75 |

*Above parameter only for inner core.

* Above specifications are for device without connector.

* For devices with connectors, IL will be 1dB higher, RL will be 5dB lower,ER will be 2dB lower & handling power will be only 1W(CW)

* The PM fiber and connector key are aligned to the slow axis.

* The material must be RoHS compliant.

## Package Dimensions

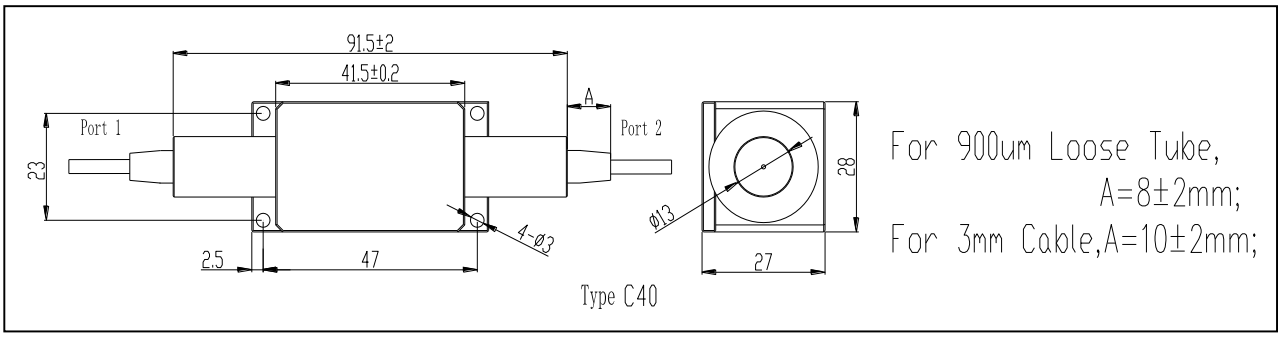


## Ordering Information

**HPMI**-①①-②-③③-④-⑤-⑥-⑦-⑧

①①: Center Wavelength
61 - 610nm
63 - 630nm
65 - 650nm
67 - 670nm
69 - 690nm
S - Specify

②: Package Type
C40 - Type C40

③③: Handling Power
0.3 - 0.3W
S - Specify

④: Axis Alignment
F - Fast Axis Blocked

⑤: Connector Type
1A - FC/UPC
2A - FC/APC(Step)
N - None
S - Specify

⑥: Fiber Jacket
B - Bare Fiber
C - 900um Loose Tube(Red)
S - Specify

⑦: Fiber Length
0.6 - 0.6m
S - Specify

⑧: Fiber Type
74 - Nufern PM 780-HP Fiber
75 - Nufern PM460 Fiber
88 - PM 630-HP Fiber
S - Specify

# High Power Polarization Insensitive Isolator 6xxnm 1W

Spec Review No.: SR1709008B Date:Nov.05, 2024

**Specifications**

| Parameters | Unit | Values |
|---|---|---|
| Center Wavelength (λc) | nm | 633 or Specify |
| Operating Wavelength Range | nm | ±10 |
| Min. Isolation at λc,23℃ | dB | 22 |
| Typ. Insertion Loss at λc,23℃ | dB | 0.9 |
| Max. Insertion Loss at λc,23℃ | dB | 1.3 |
| Min. Return Loss ,23℃ | dB | 50/50 |
| Max. Polarization Dependent Loss | dB | 0.15 |
| Max. Optical Average Power | W | 0.5 or Specify |
| Max. Tensile Load | N | 5 |
| Operating Temperature | ℃ | 10 to +50 |
| Storage Temperature | ℃ | 0 to +75 |

* Above specifications are for device without connector.

*For devices with connectors, IL will be 1.2dB higher, RL will be 5dB lower, handling power will be only 1W(CW).

*The material must be RoSH compliant.

**Package Dimensions**

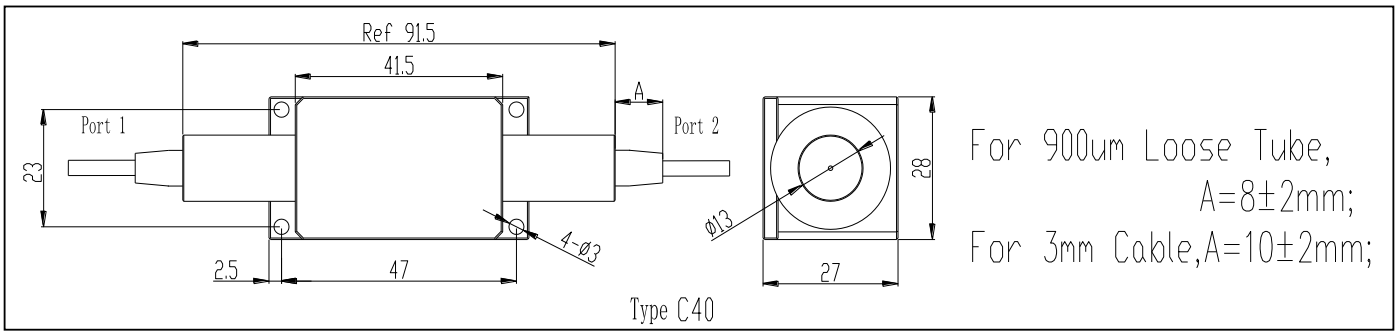


**Ordering Information**

**HPII-①①-②-③③-④-⑤-⑥-⑦**

①①: Center Wavelength
63 - 633nm
S - Specify

②: Package Type
C40 - Type C40

③③: Handling Power
0.5 - 0.5W
S - Specify

④: Connector Type
N - None
S - Specify

⑤: Fiber Jacket
B - Bare Fiber
F - 900um Loose Tube
S - Specify

⑥: Fiber Length
1 - 1m
S - Specify

⑦: Fiber Type
38 - HI780 Fiber
100 - Nufern 630-HP Fiber
S - Specify

# High Power Polarization Maintaining Isolator 7xxnm 1W

Spec Review No.: SR1502002B Date: Feb. 10 2023

## Specifications

| Parameters | Unit | Values |
|---|---|---|
| Center Wavelength (λc) | nm | 780 |
| Operating Wavelength Range | nm | ±5 |
| Typ. Peak Isolation | dB | 30-35 |
| Min. Isolation at 23℃ | dB | 25 |
| Typ. Insertion Loss at 23℃ | dB | 0.6 |
| Max. Insertion Loss at 23℃ | dB | 1.0 |
| Min. Return Loss (input/output) | dB | 50/50 |
| Min. Extinction Ratio (only for B Type) | dB | 20 |
| Min. Extinction Ratio (only for F Type) | dB | 22 |
| Max. Optical Power (CW) | mW | 300 or specify |
| Max. Tensile Load | N | 5 |
| Operating Temperature | ℃ | -5 to +50 |
| Storage Temperature | ℃ | -20 to+75 |

* Above specifications are for device without connector.
* For devices with connectors, IL will be 1dB higher, RL will be 5dB lower,ER will be 2dB lower & handling power will be only 1W(CW)
* The PM fiber and connector key are aligned to the slow axis.
* The material must be RoHS compliant.

## Package Dimensions

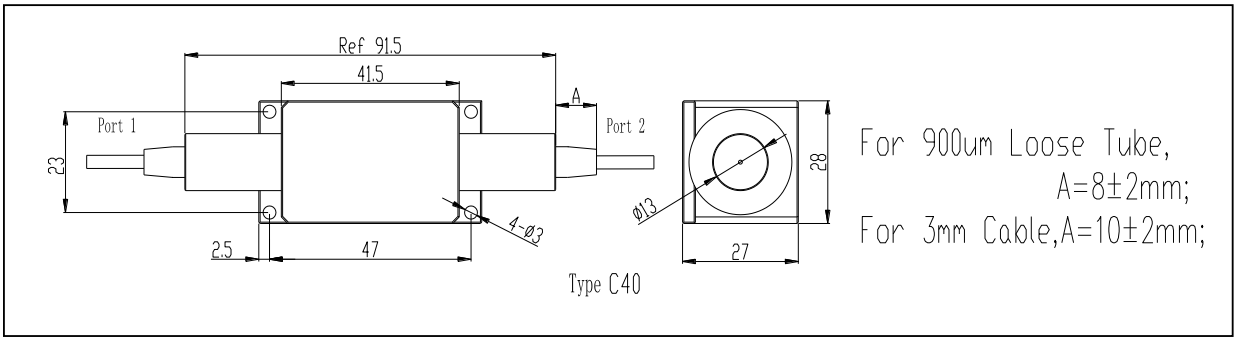


## Ordering Information

**HPMI**-①①-②-③③-④-⑤⑤-⑥⑥-⑦⑦

①①: Wavelength
78 - 780nm
SS - Specify

②: Package Type
C40 - Type C40

③③: Handling Power
0.3 - 300mW
SS - Specify

④: Axis Alignment
F - Fast Axis Blocked
B - Both Axis Working

⑤⑤: Connector Type on Port 1 & 2
1A - FC/UPC
2A - FC/APC(Step)
3A - SC/UPC
4A - SC/APC(Step)
5A - FC/APC(Cone)
N - None

⑥⑥: Fiber Jacket on Port 1 & 2
B - Baer Fiber
C - 900um Loose Tube(Red)
S - Specify

⑦⑦: Fiber Length
1 - 1.0m
S - Specify

⑧:Fiber Type
20 - PM 850 panda Fiber

# High Power Polarization Insensitive Isolator 7xx~8xxnm 300mW

Spec No.: CAT-05-001G Date:

**Specifications**

| Parameters | Unit | Values |
|---|---|---|
| Center Wavelength (λc) | nm | 785 |
| Operating Wavelength Range | nm | ±10 |
| Max. PDL at 23℃ | dB | 0.1 |
| Typ. Peak Isolation | dB | 32-40 |
| Min. Isolation at 23℃ | dB | 25 |
| Typ. Insertion Loss at 23℃ | dB | 0.6 |
| Max. Insertion Loss at 23℃ | dB | 1.0 |
| Min. Return Loss (Input/Output) | dB | 50/50 |
| Max. Optical Power (CW) | W | 0.3 |
| Max. Tensile Load | N | 5 |
| Fiber Type | | HI 780 Fiber |
| Operating Temperature | ℃ | -5 to +50 |
| Storage Temperature | ℃ | -20 to+75 |

*Above specifications are for device without connector.

*For devices with connectors, IL will be 1dB higher, RL will be 5dB lower and handling power will be 1W CW or lower.

*Package size indicated is for standard choose, if special size is required, please discuss with Optizone.

*Please provide the details of pulse conditions including pulse width, repitition, peak power for inquiries if necessary.

*The material must be RoSH compliant.

**Package Dimensions**

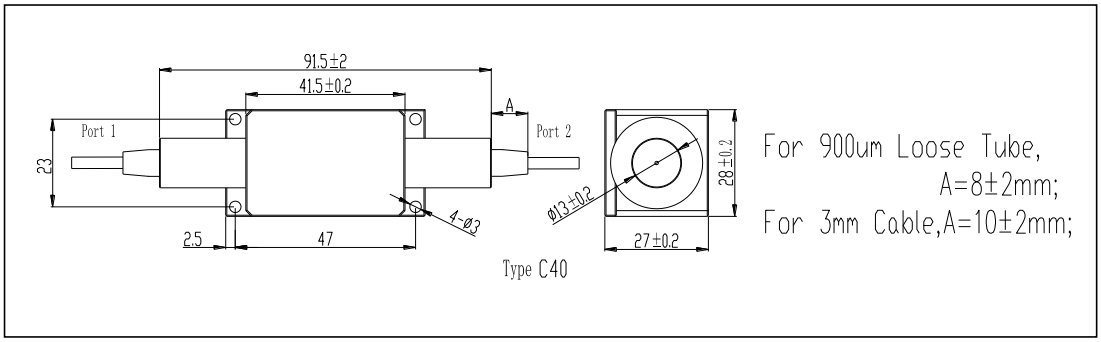


**Ordering Information**

**HPII**-①①-②-③-④④-⑤⑤-⑥⑥-⑦⑦

①①: Wavelength
85 - 850nm
SS - Specify

②: Package Type
C40 - Type C40

③:Handling Power
0.3 - 300mW
0.5 - 500mW

④④: Connector Type on Port 1 & 2
1A - FC/UPC
2A - FC/APC(Step)
3A - SC/UPC
4A - SC/APC(Step)
N - None
S - Specify

⑤⑤: Fiber Jacket on Port 1 & 2
B - Baer Fiber
F - 900um Loose Tube(White)
T - 3mm Cable(Yellow)
S - Specify

⑥⑥: Fiber Length
1 - 1.0m
S - Specify

⑦⑦: Fiber Length
38 - HI 780
S - Specify

# High Power Polarization Maintaining Broadband Isolator 8xxnm 1W

Spec Review No.: SR2202017B Date: May. 18, 2023

## Specifications

| Parameters | Unit | Values |
|---|---|---|
| Center Wavelength (λc) | nm | 850 |
| Operating Wavelength Range | nm | ±50 |
| Min. Extinction Ratio at λc,23℃ | dB | 20 |
| Typ. Isolation at λc,23℃ | dB | ＞32 |
| Min. Isolation at 23℃ | dB | 23 |
| Typ. Insertion Loss at λc,23℃ | dB | 1.0 |
| Max. Insertion Loss at λc±30nm,23℃ | dB | 1.3 |
| Max. Insertion Loss at λc±40nm,23℃ | dB | 1.7 |
| Max. Insertion Loss at λc±50nm,23℃ | dB | 2.0 |
| Min. Return Loss | dB | 50 |
| Max. Optical Power (CW) | W | 0.3 or Specify |
| Max. Tensile Load | N | 5 |
| Operating Temperature | ℃ | 0 to 60 |
| Storage Temperature | ℃ | -20 to 75 |

* Above specifications are for device without connector.
* For devices with connectors, IL will be 1dB higher, RL will be 5dB lower,ER will be 2dB lower & handling power will be only 1W(CW)
* The PM fiber and the connector key are aligned to the slow axis.
* If reverse power exceeds 10% of the forward power, please discuss with Optizone.
* The isolation is tested at OSA settings:RES:0.05nm,SENS:HIGH3,SMPL:8000(MANU).
* The material must be RoHS compliant.

## Package Dimensions

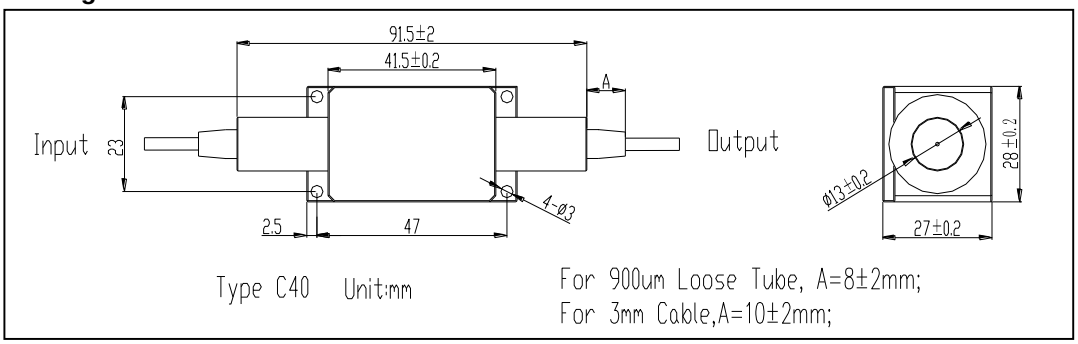


## Ordering Information

**HPMBI**-①①-②②-③③-④-⑤⑤-⑥⑥-⑦-⑧⑧

①①: Wavelength
85 - 850nm
SS - Specify

②②: Package Type
C40 - Type C40

③③:Handling Power
0.3 - 300mW
S - Specify

④: Axis Alignment
F - Fast Axis Blocked

⑤⑤: Connector Type
1A - FC/UPC
2A - FC/APC（Step）
3A - SC/UPC
4A - SC/APC
N - None
S - Specify

⑥⑥: Fiber Jacket
B - Baer Fiber
C - 900um Loose Tube （Red）
S - Specify

⑦: Fiber Length
1.1 - 1.1m

⑧⑧:Fiber Type
20 - PM 850 panda Fiber

# High Power Polarization Maintaining Isolator 9xxnm 1W

Spec No.: CAT-05-006I Date:

**Specifications**

| Parameters | Unit | Values |
|---|---|---|
| Center Wavelength (λc) | nm | 980 or Specify |
| Operating Wavelength Range | nm | ±10 or Specify |
| Min. Extinction Ratio (only for B Type) | dB | 20 |
| Min. Extinction Ratio (only for F Type) | dB | 22 |
| Typ. Peak Isolation | dB | 32-40 |
| Min. Isolation at 23℃ | dB | 25 |
| Typ. Insertion Loss at 23℃ | dB | 0.6 |
| Max. Insertion Loss at 23℃ | dB | 1.0 |
| Min. Return Loss (Input/Output) | dB | 50/50 |
| Max. Optical Power (CW) | W | 1 , 2 ,3 or Specify |
| Max. Tensile Load | N | 5 |
| Operating Temperature | ℃ | -5 to+50 |
| Storage Temperature | ℃ | -20 to+75 |

* Above specifications are for device without connector.

* For devices with connectors, IL will be 1dB higher, RL will be 5dB lower,ER will be 2dB lower & handling power will be only 1W(CW)

* The PM fiber and connector key are aligned to the slow axis.

* The material must be RoHS compliant.

**Package Dimensions**

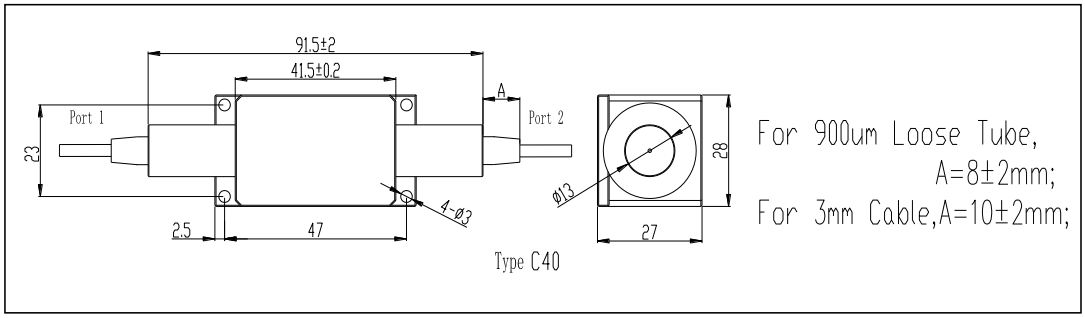


**Ordering Information**

**HPMI**-①①-②-③③-④④-⑤⑤-⑥⑥-⑦-⑧⑧

①①: Wavelength
98 - 980nm
SS - Specify

②: Package Type
C40 - Type C40

③③: Handling Power
01 - 1W
02 - 2W
03 - 3W

④④: Axis Alignment
F - Fast Axis Blocked
B - Both Axis Working

⑤⑤: Connector Type on Port 1 & 2
1A - FC/UPC
2A - FC/APC(Step)
3A - SC/UPC
4A - SC/APC(Step)
N - None
S - Specify

⑥⑥: Fiber Type on Port 1 & 2
B - Baer Fiber
C - 900um Loose Tube(Red)
S - Specify

⑦: Fiber Length on Port 1 & 2
1 - 1.0m
S - Specify

⑧⑧:Fiber Type
1 - PM980 Fiber

# High Power Polarization Insensitive Isolator 9xxnm 1W

Spec No. CAT-05-002H Date:

**Specifications**

| Parameters | Unit | Values |
|---|---|---|
| Center Wavelength (λc) | nm | 980 |
| Operating Wavelength Range | nm | ±10 |
| Max. PDL | dB | 0.1 |
| Typ. Peak Isolation | dB | 32-40 |
| Min. Isolation at 23℃ | dB | 25 |
| Typ. Insertion Loss at 23℃ | dB | 0.6 |
| Max. Insertion Loss at 23℃ | dB | 1.0 |
| Min. Return Loss (input/output) | dB | 50/50 |
| Max. Optical Power (CW) | W | 1 , 2 ,3 or Specify |
| Max. Tensile Load | N | 5 |
| Operating Temperature | ℃ | -5 to +50 |
| Storage Temperature | ℃ | -20 to+75 |

*Above specifications are for device without connector.

*For devices with connectors, IL will be 1dB higher, RL will be 5dB lower and handling power will be 1W CW or lower.

*Package size indicated is for standard choose, if special size is required, please discuss with Optizone.

*Please provide the details of pulse conditions including pulse width, repitition, peak power for inquiries if necessary.

*The material must be RoSH compliant.

**Package Dimensions**

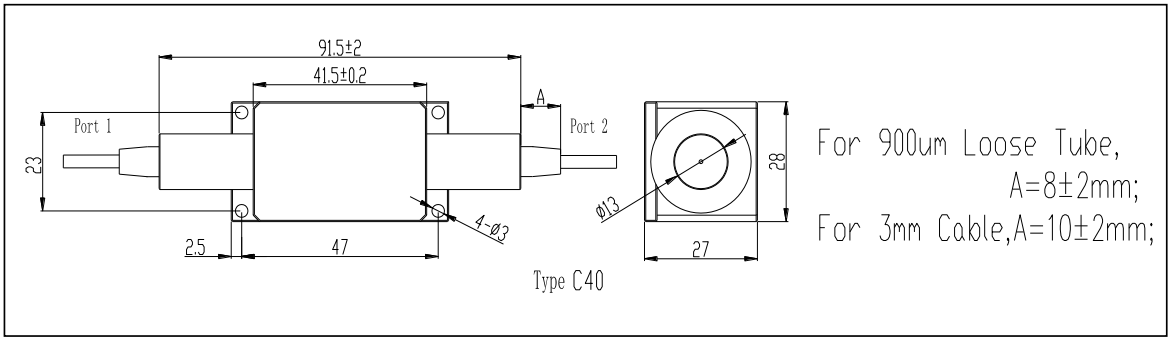


**Ordering Information**

**HPII**-①①-②-③③-④④-⑤⑤-⑥-⑦⑦

①①: Wavelength
98 - 980nm
SS - Specify

②: Package Type
C40 - Type C40

③③:Handling Power
01 - 1W
02 - 2W
03 - 3W
S - Specify

④④: Connector Type on Port 1 & 2
1A - FC/UPC
2A - FC/APC(Step)
3A - SC/UPC
4A - SC/APC(Step)
N - None
S - Specify

⑤⑤: Fiber Type on Port 1 & 2
B - Baer Fiber
F - 900um Loose Tube(White)
T - 3mm Cable(Yellow)
S - Specify

⑥: Fiber Length on Port 1 & 2
1 - 1.0m
S - Specify

⑦⑦: Fiber Type
1 - HI 1060
2 - 10/125 N.A 0.08
35 - SCF-UN-10/125 NA0.08
72- LMA-GDF 10/125-M NA0.075
S - Specify

# Polarization Maintaining Isolator 10xxnm 300mW

Spec No.: CAT-09-026C Date:

**Specifications**

| Parameters | Unit | Values | | | |
|---|---|---|---|---|---|
| Stage | | Single Stage | | Dual Stage | |
| Grade | | Grade P | Grade A | Grade P | Grade A |
| Center Wavelength (λc) | nm | 1064 | | | |
| Typ. Peak Isolation | dB | 40 | 38 | 55 | 52 |
| Min. Isolation at 23℃ | dB | 35 | 32 | 45 | 42 |
| Typ. Insertion Loss at 23℃ | dB | 1.5 | 1.6 | 2.4 | 2.6 |
| Max. Insertion Loss at -5℃-50℃ | dB | 1.8 | 2.0 | 3.2 | 3.4 |
| Min. Return Loss (Input/Output) | dB | 55/50 | 55/50 | 55/50 | 55/50 |
| Min. Extinction Ratio (only for B Type) | dB | 20 | 18 | 20 | 18 |
| Min. Extinction Ratio (only for F Type) | dB | 23 | 23 | 23 | 23 |
| Max. Optical Power (CW) | mW | 300 | | | |
| Max. Tensile Load | N | 5 | | | |
| Fiber Type | | PM 980 Panda Fiber | | | |
| Operating Temperature | ℃ | -5 to +50 | | | |
| Storage Temperature | ℃ | -40 to +85 | | | |

*Above specifications are for device without connector.

*For devices with connectors, IL will be 0.5dB higher, RL will be 5dB lower and ER will be 2dB lower.

*The PM fiber and the connector key are aligned to the slow axis.

*The material must be RoHS compliant.

**Package Dimensions**

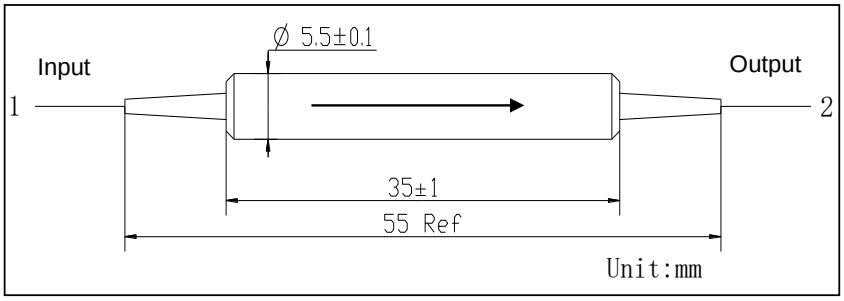


**Ordering Information**

**PMI**-①-②-③-④-⑤⑤-⑥⑥-⑦-⑧-⑨⑨

①: Wavelength
1064 - 1064nm

②: Grade
P - Premium Grade
A - A Grade

③: Stage
S - Single Stage
D - Dual Stage

④: Axis Alignment
F - Fast Axis Blocked
B - Both Axis Working

⑤⑤: Connector Type on Port 1 & 2
1B - FC/UPC
2B - FC/APC (Step)
3D - SC/UPC
4D - SC/APC (Step)
N - None
S - Specify

⑥⑥: Fiber Jacket on Port 1 & 2
B - Bare Fiber
C - 900um Red Loose Tube
S - Specify

⑦: Fiber Type
1B - PM 980
S - Specify

⑧: Fiber Length
0.8 - 0.8m
S - Specify

⑨⑨: Package Type
01 - Ø5.5×35

# Polarization Maintaining Isolator 10xxnm 300mW(For Ultrafast)

Spec No.: CAT-011-003B Date:

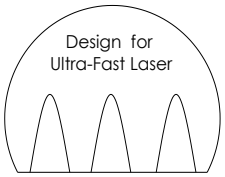


## Specifications

| Parameters | Unit | Values | |
|---|---|---|---|
| Stage | | Single Stage | Dual Stage |
| Grade | | Grade P | |
| Center Wavelength (λc) | nm | 1064 | |
| Typ. Peak Isolation | dB | 40 | 55 |
| Min. Isolation at 23℃ | dB | 35 | 45 |
| Typ. Insertion Loss at 23℃ | dB | 1.5 | 2.4 |
| Max. Insertion Loss at -5℃-50℃ | dB | 1.8 | 3.2 |
| Min. Return Loss (Input/Output) | dB | 55/50 | 55/50 |
| Min. Extinction Ratio (only for B Type) | dB | 20 | 20 |
| Min. Extinction Ratio (only for F Type) | dB | 23 | 23 |
| Max. Average Optical Power (Proper SOP) | mw | 300 | |
| Max. Peak Power for ps Pulse (Proper SOP) | KW | 0.5, 1 or Specify | |
| Max. Tensile Load | N | 5 | |
| Operating Temperature | ℃ | -5 to +50 | |
| Storage Temperature | ℃ | -40 to +85 | |

*Above specifications are for device without connector.

*For devices with connectors, IL will be 0.5dB higher, RL will be 5dB lower, ER will be 2dB lower and optical power is only 1W(CW).

*The PM fiber and the connector key are aligned to the slow axis.

*The material must be RoHS compliant.

## Package Dimensions

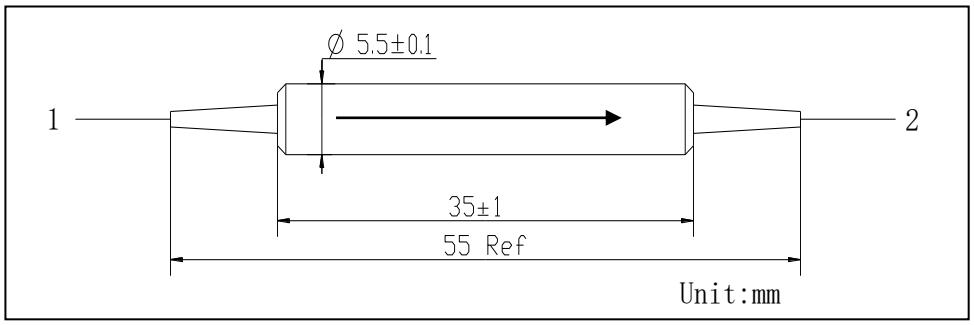


## Ordering Information

**PMI-UF-**①-②-③-④④-⑤-⑥⑥-⑦⑦-⑧-⑨-⑩⑩

①: Wavelength
1064 - 1064nm

②: Grade
P - Premium Grade

③: Stage
S - Single Stage
D - Dual Stage

④④: Average /Peak Power
0.3/0.5 - 0.3W /0.5kW
S - Specify

⑤: Axis Alignment
F - Fast Axis Blocked
B - Both Axis Working

⑥⑥: Connector Type on Port 1 &2
1B - FC/UPC
2B - FC/APC (Step)
3D - SC/UPC
4D - SC/APC (Step)
N - None
S - Specify

⑦⑦: Fiber Jacket on Port 1 &2
B - Bare Fiber
C - 900um Red Loose Tube
S - Specify

⑧: Fiber Type
1B - PM 980
S - Specify

⑨: Fiber Length
0.8 - 0.8m
S - Specify

⑩⑩: Package Type
01 - Ø5.5×35

# Polarization Insensitive Isolator 10xxnm 300mW

Spec No.: CAT-07-003C Date:

**Specifications**

| Parameters | Unit | Values | | | |
|---|---|---|---|---|---|
| Stage | - | Single Stage | | Dual Stage | |
| Grade | - | Grade P | Grade A | Grade P | Grade A |
| Center Wavelength | nm | 1064 | | | |
| Operating Wavelength Range | nm | ±5 | | | |
| Typ. Peak Isolation | dB | 40 | 38 | 55 | 52 |
| Min. Isolation at 23℃ | dB | 30 | 28 | 45 | 42 |
| Typ. Insertion Loss at 23℃ | dB | 1.4 | 1.5 | 2.3 | 2.5 |
| Max. Insertion Loss at -5℃ to 50℃ | dB | 1.8 | 2.0 | 3.2 | 3.4 |
| Min. Return Loss (Input/Output) | dB | 55/50 | 55/50 | 55/50 | 55/50 |
| Max. PDL at 23℃ | dB | 0.15 | 0.15 | 0.15 | 0.15 |
| Max. Optical Power (CW) | mW | 300 | | | |
| Max. Tensile Load | N | 5 | | | |
| Fiber Type | - | Hi 1060 Fiber | | | |
| Operating Temperature | ℃ | -5 to +50 | | | |
| Storage Temperature | ℃ | -40 to +85 | | | |

*Above specifications are for device without connector.

*For devices with connectors, IL will be 0.3dB higher and RL will be 5dB lower.

*The material must be RoHS compliant.

**Package Dimensions**

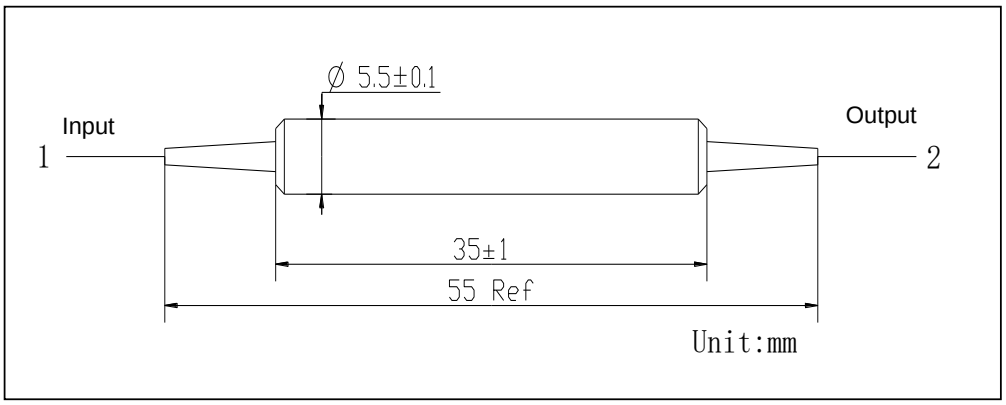


**Ordering Information**

**PII-**①-②-③-④-⑤⑤-⑥⑥-⑦-⑧-⑨

①: Wavelength
1064 - 1064nm
S - Specify

②: Grade
P - Premium Grade
A - A Grade

③: Stage
S - Single Stage
D - Dual Stage

④: Handing Power
0.3 - 0.3W

⑤⑤: Connector Type on Port 1 & 2
1B - FC/UPC
2B - FC/APC
3D - SC/UPC
4D - SC/APC
N - None
S - Specify

⑥⑥: Fiber Jacket on Port 1 & 2
B - 250um Bare Fiber
F - 900um White Loose Tube
T - 3mm Yellow Cable
S - Specify

⑦: Fiber Type
6 - Hi 1060 Fiber

⑧: Fiber Length
1 - 1m
S - Specify

⑨: Package Type
01 - Ø5.5×35

# High Power Polarization Maintaining Isolator 10xxnm 1W (Faraday Type)

Spec No.: CAT-05-064D Date:

## Specifications

| Parameters | Unit | Values | |
|---|---|---|---|
| Isolator Type | | A43 | B43 |
| Center Wavelength | nm | 1064 | |
| Operating Wavelength Range | nm | ±5 | |
| Typ. Peak Isolation | dB | 35 | |
| Min. Isolation at 23℃ | dB | 28 | |
| Typ. Insertion Loss at 23℃ | dB | 1.6 | 1.7 |
| Max. Insertion Loss at 23℃ | dB | 1.8 | 1.9 |
| Max. Insertion Loss at 1064nm @ 1.0W , 23℃ | dB | 2.0 | 2.1 |
| Max. Insertion Loss at 1064nm @ 1.5W , 23℃ | dB | 2.5 | 2.3 |
| Max. Insertion Loss at 1064nm @ 2.0W , 23℃ | dB | -- | 2.5 |
| Min. Return Loss (Input/Output) | dB | 50/50 | |
| Min. ER at 23℃ (F-Type) | dB | 22 | |
| Min. ER at 23℃ (B-Type) | dB | 20 | |
| Max. Optical Average Power (CW) | W | 1.0 or specify | 2.0 or specify |
| Max. Peak Power for ns Pulse | kW | 10 @ 1ns | |
| Max. Tensile Load | N | 5 | |
| Operating Temperature | ℃ | -5 to +50 | |
| Storage Temperature | ℃ | -20 to +75 | |

*Above specifications are for device without connector.

*For devices with connectors, IL will be 0.5dB higher, RL will be 5dB lower , ER will be 2dB lower and optical power is only 1W（CW）.

*The PM fiber and connector key are aligned to the slow axis.

*The material must be RoHS compliant.

## Package Dimensions

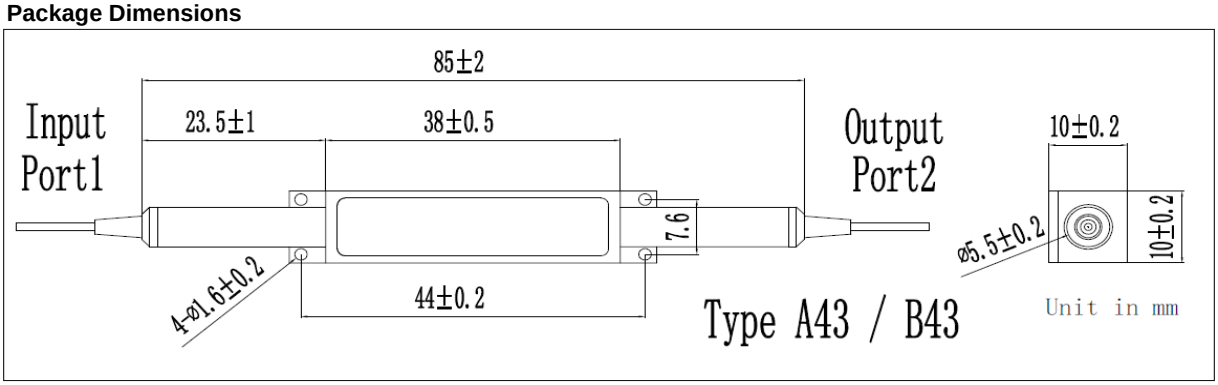


## Ordering Information

**HPMI-①①-②②②-③③-④-⑤⑤-⑥⑥-⑦-⑧⑧**

①①: Wavelength
06 - 1064nm

②②②: Package Type
A43 - Type A43
B43 - Type B43

③③: Handling Power
01 - 1W
02 - 2W

④: Axis Alignment
F - Fast Axis Blocked
B - Both Axis Working

⑤⑤: Connector Type on Port 1 & 2
1A - FC/UPC
2A - FC/APC(Step)
3A - SC/UPC
4A - SC/APC(Step)
N - None
S - Specify

⑥⑥: Fiber Jacket on Port 1 & 2
B - 250um Bare Fiber
C - 900um Loose Tube(Red)
S - Specify

⑦: Fiber Length
1 - 1.0m
S - Specify

⑧⑧:Fiber Type
1 - PM980 Fiber
45 - PLMA-GDF 10/125 -M NA0.075

# High Power Polarization Maintaining Isolator 10xxnm 1~10W (TGG Type)

Spec Review No.: SR2401051D Date: Aug. 9, 2024

## Specifications

| Parameters | Unit | Values |
|---|---|---|
| Center Wavelength (λc) | nm | 980,1030,1064 or Specify |
| Operating Wavelength Range | nm | ±5 |
| Typ. Peak Isolation at λc,23℃ | dB | 28~33 |
| Min. Isolation at λc,23℃ | dB | 26 |
| Typ. Insertion Loss at at λc,23℃ | dB | 0.5 |
| Max. Insertion Loss at λc,23℃ | dB | 0.8 |
| Min. Return Loss at λc,23℃ | dB | 50 |
| Min. ER at 23℃ | dB | 20 |
| Max. Average Power @ Proper SOP | W | 1,5 or Specify |
| Max. Peak Power for ns Pulse | kW | 10@10ns |
| Max. Tensile Load | N | 5 |
| Operating Temperature | ℃ | 10 to +50 |
| Storage Temperature | ℃ | 0 to +75 |

*Above parameter only for inner core.

* Above specifications are for device without connector.

* For devices with connectors, IL will be 0.5dB higher, RL will be 5dB lower,ER will be 2dB lower & handling power will be only 1W(CW)

* The PM fiber and connector key are aligned to the slow axis.

* The material must be RoHS compliant.

## Package Dimensions

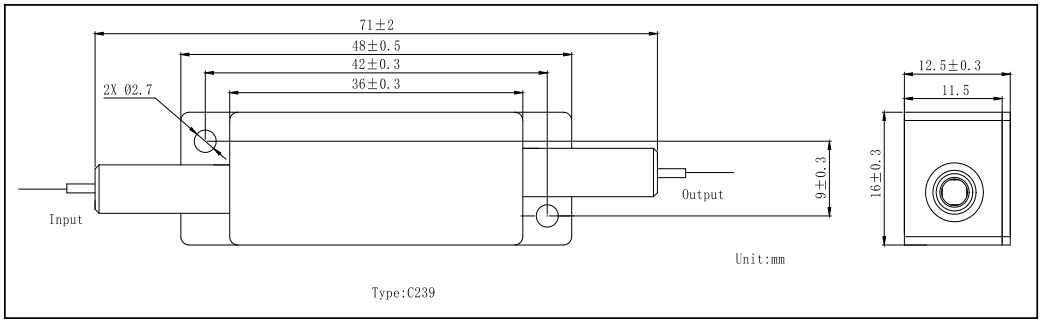


## Ordering Information

**HPMI**-①①-②-③③-④-⑤-⑥-⑦-⑧

①①: Wavelength
98 - 980nm
03 - 1030nm
06 - 1064nm
S - Specify

②: Package Type
C239 - Type C239

③③: Handling Power
01 - 1W
05 - 5W

④: Axis Alignment
F - Fast Axis Blocked

⑤: Connector Type
N - None
S - Specify

⑥: Fiber Jacket
B - Bare Fiber
C - 900um Loose Tube
S - Specify

⑦: Fiber Length
0.6 - 0.6m
S - Specify

⑧: Fiber Type
1 - PM980 Fiber
45 - PLMA-GDF 10/125-M NA0.075 Fiber
65 - Nufern PM1060L 10/125 GSF NA0.085 Fiber
S - Specify

# High Power Polarization Insensitive Isolator 10xxnm 1W (Faraday Type)

Spec No.: CAT-05-063C Date:

**Specifications**

| Isolator Type | | A43 | B43 |
|---|---|---|---|
| Center Wavelength | nm | 1064 | |
| Typ. Peak Isolation | dB | 35 | |
| Min. Isolation at 23℃ | dB | 28 | |
| Typ. Insertion Loss at 1064nm , 23℃ | dB | 1.4 | 1.4 |
| Max. Insertion Loss at 1064nm , 23℃ | dB | 1.7 | 1.7 |
| Max. Insertion Loss at 1064nm @ 1.0W , 23℃ | dB | 2.0 | 1.8 |
| Max. Insertion Loss at 1064nm @ 1.5W , 23℃ | dB | 2.5 | 2.0 |
| Max. Insertion Loss at 1064nm @ 2.0W , 23℃ | dB | - | 2.5 |
| Min. Return Loss (Input/Output) | dB | 50/50 | |
| Max. Polarization Dependent Loss, 23℃ | dB | 0.15 | |
| Max. Optical Power (CW) | W | 1.0 or specify | 2.0 or specify |
| Max. Peak Power | kW | 10@1ns | |
| Max. Tensile Load | N | 5 | |
| Operating Temperature | ℃ | -5 to +50 | |
| Storage Temperature | ℃ | -20 to +75 | |

*Above specifications are for device without connector.
*For devices with connectors, IL will be 0.5dB higher, RL will be 5dB lower and handling power will be 1W CW or lower.
*Package size indicated is for standard choose, if special size is required, please discuss with Optizone.
*Please provide the details of pulse conditions including pulse width, repitition, peak power for inquiries if necessary.
*The material must be RoSH compliant.

**Package Dimensions**

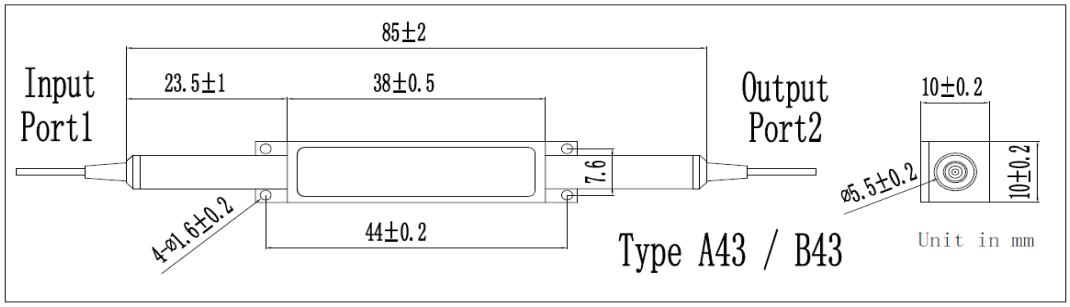


**Ordering Information**

**HPII-**①①-②-③③-④④-⑤⑤-⑥-⑦/⑦

①①: Wavelength
06 - 1064nm
S - Specify

②: Type
A43 - Type A43
B43 - Type B43

③③: Handling Power
01 - 1W
02 - 2W
S - Specify

④④: Connector Type on Port 1 & 2
1A - FC/UPC
2A - FC/APC(Step)
3A - SC/UPC
4A - SC/APC(Step)
N - None
S - Specify

⑤⑤: Fiber Jacket on Port 1 & 2
B - Baer Fiber
F - 900um Loose Tube(White)
T - 3mm Cable(Yellow)
S - Specify

⑥: Fiber Length
1 - 1.0m
S - Specify

⑦/⑦: Fiber Type
1 - HI 1060
2 - 10/125 N.A 0.08
10 - Nufern LMA-GDF-20/125-M NA0.08
35 - SCF-UN-10/125 NA0.08
72 - LMA-GDF 10/125-M NA0.075
90 - Liekki passive-12/250 SCF NA0.08
S - Specify

# High Power Polarization Insensitive Isolator 10xxnm 1~10W (TGG Type)

Spec Review No.: SR2406027A Date:Apr.18, 2024

## Specifications

| Parameters | Unit | Values |
|---|---|---|
| Center Wavelength (λc) | nm | 1064 or Specify |
| Operating Wavelength Range | nm | ±5 |
| Min. Isolation at λc,23℃ | dB | 26 |
| Typ. Insertion Loss at λc,23℃ | dB | 0.5 |
| Max. Insertion Loss at λc,23℃ | dB | 1.0 |
| Min. Return Loss at λc,23℃ | dB | 50/50 |
| Max. Polarization Dependent Loss | dB | 0.15 |
| Max. Optical Average Power | W | 10 or Specify |
| Max. Peak Power for ns pulse | kW | 10 |
| Max. Tensile Load | N | 5 |
| Operating Temperature | ℃ | 10 to +50 |
| Storage Temperature | ℃ | 0 to +75 |

* Above specifications are for device without connector.

*For devices with connectors, IL will be 0.5dB higher, RL will be 5dB lower, handling power will be only 1W(CW).

*The material must be RoSH compliant.

## Package Dimensions

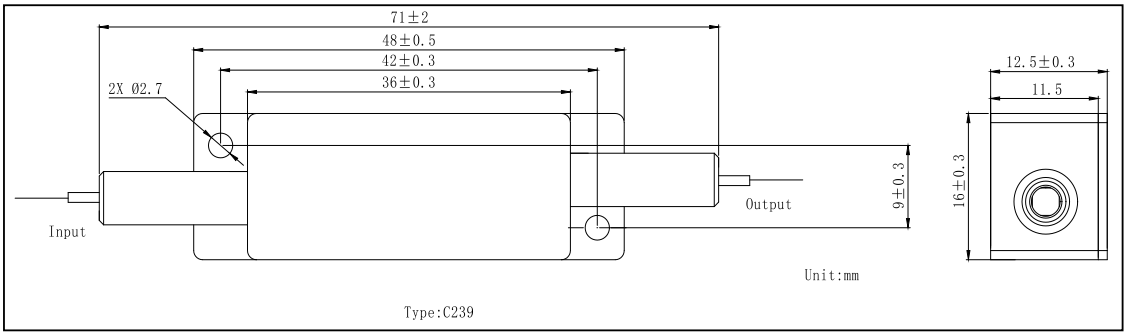


## Ordering Information

**HPII-①①-②-③③-④④-⑤⑤-⑥⑥-⑦⑦**

①①: Wavelength
06 - 1064nm
S - Specify

②: Package Type
C239 - Type C239

③③: Handling Power
10 - 10W
S - Specify

④④: Connector Type
N - None
S - Specify

⑤⑤: Fiber Jacket
B - Bare Fiber
F - 900um Loose Tube(White)
S - Specify

⑥⑥: Fiber Length
1 - 1m
S - Specify

⑦⑦: Fiber Type
1 - Hi1060 Fiber
72- LMA-GDF 10/125-M NA0.075 Fiber
83 - Nufern GSF-10/125 NA0.075 Fiber
S - Specify

# High Power Polarization Maintaining Isolator 10xxnm 50~100W

Spec Review No.: SR2403056A Date: Mar. 27, 2024

**Specifications**

| Parameters | Unit | Values |
|---|---|---|
| Center Wavelength (λc) | nm | 1064 or Specify |
| Operating Wavelength Range | nm | ±5 |
| Typ. Peak Isolation at λc,23℃,(Port2 to Port1) | dB | 30~35 |
| Min. Isolation at λc,23℃,(Port2 to Port1) | dB | 28 |
| Typ. Insertion Loss at at λc,23℃,(Port1 to Port2) | dB | 0.5 |
| Max. Insertion Loss at λc,23℃,(Port1 to Port2) | dB | 0.7 |
| Max. Insertion Loss at λc,23℃ Fast Axis,(Port1 to Port3) | dB | 1.0 |
| Min. Return Loss at λc,23℃,(Port1 , Port2) | dB | 50 |
| Min. ER at 23℃,(Port1 to Port2) | dB | 20 |
| Max. Average Power @ Proper SOP | W | 50 or Specify |
| Max. Peak Power for ns Pulse | kW | 10 |
| Max. Tensile Load | N | 5 |
| Operating Temperature | ℃ | 10 to +50 |
| Storage Temperature | ℃ | 0 to +75 |

*Above parameter only for inner core.

* Above specifications are for device without connector.

* For devices with connectors, IL will be 0.5dB higher, RL will be 5dB lower,ER will be 2dB lower & handling power will be only 1W(CW)

* The PM fiber and connector key are aligned to the slow axis.

* The material must be RoHS compliant.

**Package Dimensions**

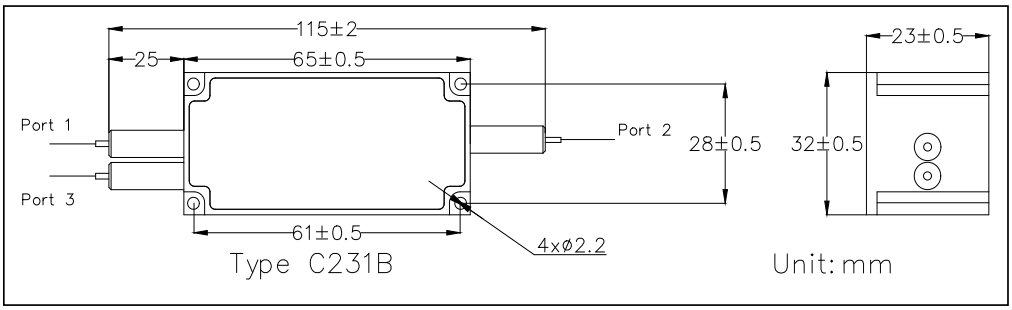


**Ordering Information**

**HPMI**-①①-②-③③-④-⑤⑤⑤-⑥-⑦-⑧⑧⑧

①①: Wavelength
06 - 1064nm
S - Specify

②: Package Type
C231B - Type C231B

③③: Handling Power
50 - 50W
S - Specify

④: Axis Alignment
F - Fast Axis Blocked

⑤⑤⑤: Connector Type
N - None
S - Specify

⑥: Fiber Jacket
B - Bare Fiber

⑦: Fiber Length
0.6 - 0.6m
S - Specify

⑧⑧⑧: Fiber Type
45 - PLMA-GDF 10/125-M NA0.075 Fiber
S72- LMA-GDF 10/125-M NA0.075 Fiber
S - Specify

# High Power Polarization Insensitive Isolator 10xxnm 50~100W

Spec Review No.: SR2405001A Date: Mar. 01, 2024

**Specifications**

| Parameters | Unit | Values |
|---|---|---|
| Center Wavelength (λc) | nm | 1064 or Specify |
| Operating Wavelength Range | nm | ±5 |
| Typ. Peak Isolation at λc,23℃,(Output to Input) | dB | 35 |
| Min. Isolation at λc,23℃,(Output to Input) | dB | 28 |
| Typ. Insertion Loss at at λc,23℃,(Input to Output) | dB | 0.45 |
| Max. Insertion Loss at λc,23℃,(Input to Output) | dB | 0.6 |
| Min. Return Loss at λc,23℃,(Input&Output) | dB | 50 |
| Min. Polarization Dependent Loss | dB | 0.15 |
| M2 Degradation | - | ≤20% |
| Max. Average Power @ Proper SOP | W | 100 or Specify |
| Max. Peak Power for ns Pulse | kW | 10 |
| Max. Tensile Load | N | 5 |
| Operating Temperature | ℃ | 10 to +50 |
| Storage Temperature | ℃ | 0 to +75 |

* Above specifications are for device without connector.
* IL will be 0.5dB higher, RL will be 5dB lower for each connector adde and optical power is only 1W.
* The material must be RoHS compliant.

**Package Dimensions**

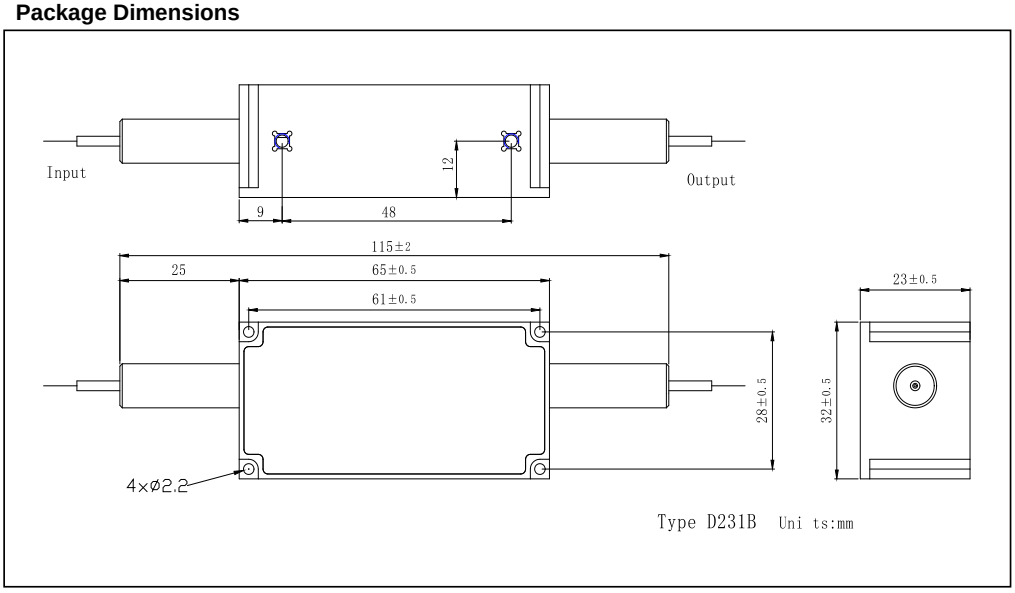


**Ordering Information**

**HPII**-①①-②-③③-④④-⑤⑤-⑥-⑦⑦

①①: Wavelength
06 - 1064nm
S - Specify

②: Package Type
C231B - Type C231B

③③: Handling Power
100 - 100W
S - Specify

④④: Connector Type
N - None
S - Specify

⑤: Fiber Jacket
B - Bare Fiber
S - Specify

⑥: Fiber Length
1 - 1.0m
S - Specify

⑦⑦: Fiber Type
126 - CJGDF-30/250-062
S - Specify

# High Power Polarization Maintaining Isolator 10xxnm 500W

Spec Review No.: SR2405036A Date: Apr. 26, 2024

## Specifications

| Parameters | Unit | Values |
|---|---|---|
| Center Wavelength (λc) | nm | 1064 or Specify |
| Operating Wavelength Range | nm | ±5 |
| Typ. Peak Isolation at λc,23℃ | dB | 30~35 |
| Min. Isolation at λc,23℃ | dB | 28 |
| Typ. Insertion Loss at 23℃ | dB | 0.45 |
| Max. Insertion Loss at λc,23℃ | dB | 0.5 |
| Min. Return Loss at λc,23℃ | dB | 50 |
| Min. ER at 23℃ | dB | 18 |
| Max. Average Power @ Proper SOP | W | 500 or Specify |
| Max. Peak Power for ns Pulse | kW | 10 |
| Max. Tensile Load | N | 5 |
| Operating Temperature | ℃ | 10 to +50 |
| Storage Temperature | ℃ | 0 to +75 |

*Above parameter only for inner core.

* Above specifications are for device without connector.

* For devices with connectors, IL will be 0.5dB higher, RL will be 5dB lower,ER will be 2dB lower & handling power will be only 1W(CW)

* The PM fiber and connector key are aligned to the slow axis.

* The material must be RoHS compliant.

## Package Dimensions

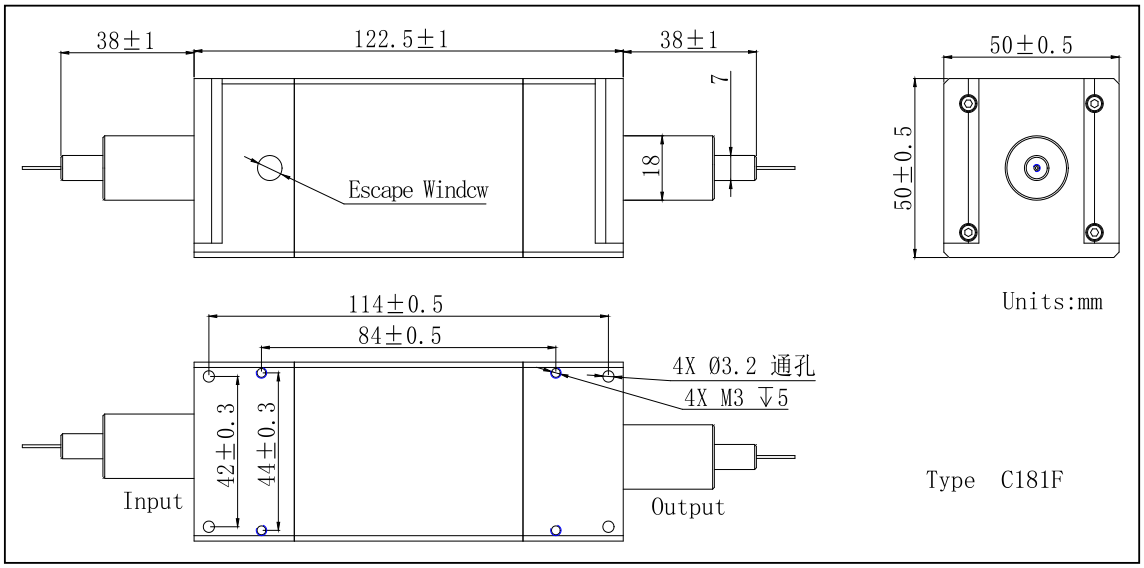


## Ordering Information

**HPMI**-①①-②-③③-④-⑤⑤-⑥⑥-⑦-⑧⑧

①①: Wavelength
06 - 1064nm
S - Specify

②: Package Type
C181F - Type C181F

③③: Handling Power
500 - 500W
S - Specify

④: Axis Alignment
F - Fast Axis Blocked
B - Both Axis Working

⑤⑤: Connector Type
N - None

⑥⑥: Fiber Jacket
B - Bare Fiber

⑦: Fiber Length
0.8 - 0.8m
S - Specify

⑧⑧: Fiber Type
71 - Nufern PLMA-GDF-25/250 NA0.065 Fiber
S - Specify

# High Power Polarization Insensitive Isolator 10xxnm 500W

Spec Review No.: SR2406043A

Date: Apr 26, 2024

**Specifications**

| Parameters | Unit | Values |
|---|---|---|
| Center Wavelength | nm | 1064 or Specify |
| Operating Wavelength Range | nm | ±5 |
| Typ. Peak Isolation | dB | 32 |
| Min. Isolation at 23℃ | dB | 28 |
| Typ. Insertion Loss at 23℃ | dB | 0.3 |
| Max. Insertion Loss at 23°C | dB | 0.45 |
| Min. Return Loss (Input/Output) | dB | 50/50 |
| Max. Polarization Dependent Loss | dB | 0.15 |
| Max. Insertion Loss@635nm | dB | 7 |
| M2 Degradation | - | ≤15% |
| Max. Average Power | W | 200,500 or Specify |
| Max. Peak Power for ns Pulse | kW | 50 |
| Max. Tensile Load | N | 5 |
| Operating Temperature | ℃ | 10 to +50 |
| Storage Temperature | ℃ | 0 to +70 |

*The material must be RoHS compliant.

**Package Dimensions**

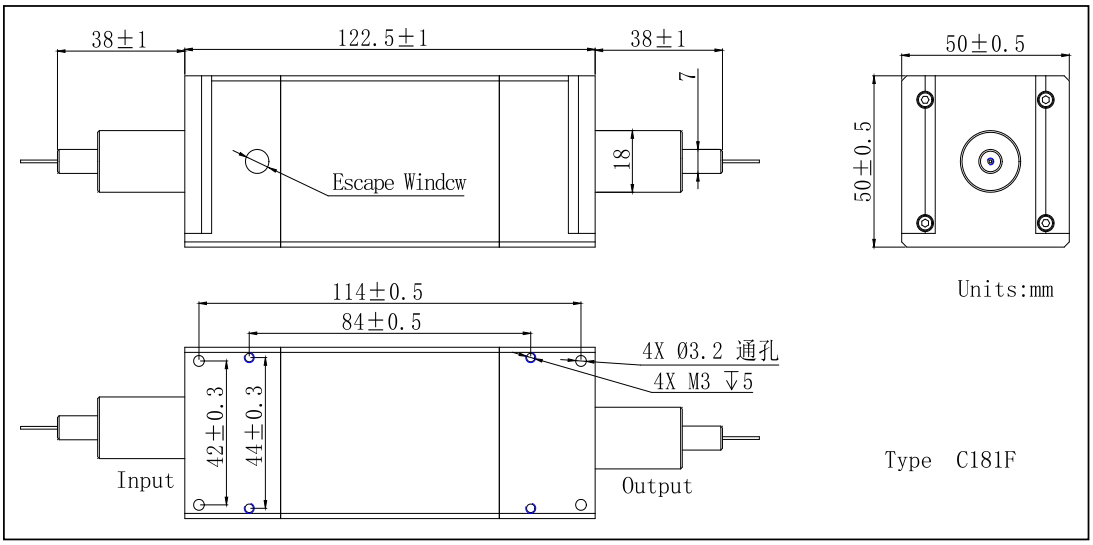


**Ordering Information**

**HPII-**①①-②-③③③-④④-⑤⑤-⑥-⑦⑦

①①: Wavelength
06 - 1064nm
S - Specify

②: Package Type
C181F - C181F

③③③: Handling Power
200 - 200W
500 - 500W
S - Specify

④④: Connector Type
N - None

⑤⑤: Fiber Jacket
B - Bare Fiber
W - 2mm Loose Tube(White)

⑥: Fiber Length
2 - 2m
S - Specify

⑦⑦: Fiber Type
66 - Nufern LMA-GDF-30/250-M NA0.062 Fiber
111 - CJ-GDF-100/400/550-NA0.12 Fiber
119 - CJGDF-50/400,NA0.12 Fiber
120 - CJGDF-25/250 NA0.065 Fiber
128 - YOFC SI 100/120/360-15/540(DC)NA0.15 Fiber
S - Specify

# High Power Polarization Insensitive Isolator 10xxnm 1000W

Spec Evaluation No.: SE2312011B Date: Dec. 26, 2023

**Specifications**

| Parameters | Unit | Values |
|---|---|---|
| Center Wavelength | nm | 1064 |
| Operating Wavelength Range | nm | ±5 |
| Typ. Peak Isolation | dB | 32 |
| Min. Isolation at 23℃ | dB | 28 |
| Typ. Insertion Loss at 23℃ | dB | 0.3 |
| Max. Insertion Loss at 23°C | dB | 0.45 |
| Min. Return Loss (Input/Output) | dB | 50/50 |
| Max. Polarization Dependent Loss | dB | 0.2 |
| Max. Insertion Loss@635nm | dB | 7 |
| Max. Average Power | W | 1000 |
| Max. Peak Power for ns Pulse | MW | 2 |
| Max. Tensile Load | N | 5 |
| Flow Rate of Water | L/min | 1.5～3 |
| Max. Water Pressure | Mpa | 8 |
| Operating Temperature | ℃ | 10 to +50 |
| Storage Temperature | ℃ | 0 to +70 |

*The material must be RoHS compliant.

**Package Dimensions**

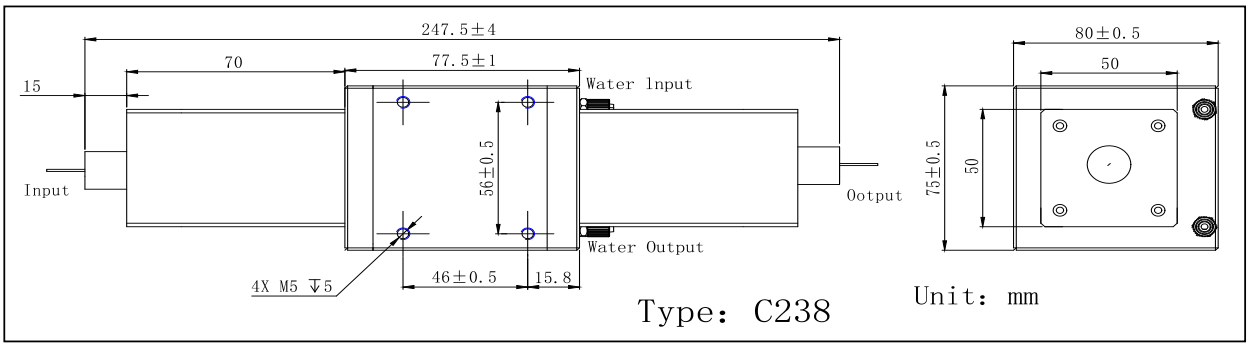


**Ordering Information**

**HPII-**①①-②-③③③-④④-⑤⑤-⑥-⑦⑦

①①: Wavelength
06 - 1064nm
S - Specify

②: Package Type
C238 - Type C238
S - Specify

③③③: Handling Power
1000 - 1000W
S - Specify

④④: Connector Type
N - None

⑤⑤: Fiber Jacket
B - Bare Fiber

⑥: Fiber Length
1.5 - 1.5m
S - Specify

⑦⑦: Fiber Type
131 - BrightCore 200/400 NA0.1 Fiber
132 - GDF-DC 200/360 NA0.12 Fiber
S- Specify

# High Power Polarization Maintaining Isolator 15xxnm 1~10W

Spec No.: CAT-05-008E Date:

**Specifications**

| Parameters | Unit | Values | |
|---|---|---|---|
| Stage | | Single Stage | Dual Stage |
| Center Wavelength (λc) | nm | 1310, 1480, 1550 or 1590 | |
| Operating Wavelength Range | nm | ±20 | |
| Typ. Peak Isolation | dB | 42 | 58 |
| Min. Isolation at 23℃ | dB | 28 | 48 |
| Typ. Insertion Loss at 23℃ | dB | 0.4 | 0.5 |
| Max. Insertion Loss at 23℃,λc | dB | 0.6 | 0.7 |
| Min. Return Loss (Input/Output) | dB | 55 | 55 |
| Min. Extinction Ratio(only for F type) | dB | 25 | 25 |
| Min. Extinction Ratio(only for B type) | dB | 22 | 22 |
| Max. Optical Power (CW) | W | 1, 5,10 or Specify | |
| Max. Peak Power for ns Pulse | kW | 10 | |
| Max. Tensile Load | N | 5 | |
| Fiber Type | | PM Panda Fiber | |
| Operating Temperature | ℃ | -5 to +70 | |
| Storage Temperature | ℃ | -40 to +85 | |

*Above specifications are for device without connector.

*For devices with connectors, IL will be 0.3dB higher, RL will be 5dB lower, ER will be 2dB lower,and handling power will be 1W(CW).

*The PM fiber and the connector key are aligned to the slow axis.

*For pulse application please discuss with Optizone.

* The material must be RoHS compliant.

**Package Dimensions**

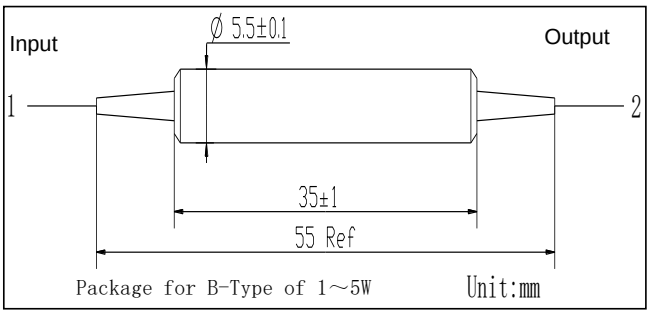


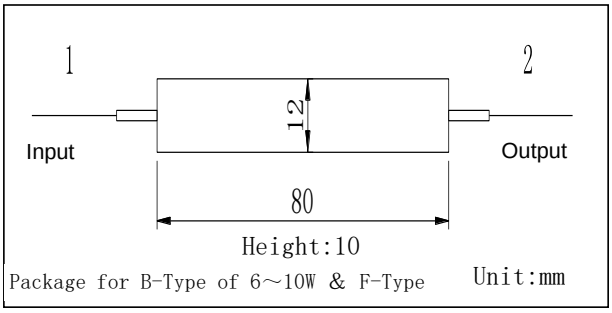


**Ordering Information**

**HPMI**-①-②-③-④-⑤⑤-⑥⑥-⑦-⑧-⑨⑨

①: Wavelength
1310 - 1310nm
1480 - 1480nm
1550 - 1550nm
S - Specify

②: Stage
S - Single Stage
D - Dual Stage

③: Power Level
1 - 1W
5 - 5W
10 -10W
S - Specify

④: Axis Alignment
F - Fast Axis Blocked
B - Both Axis Working

⑤⑤: Connector Type on Port 1 & 2
N - None
S - Specify

⑥⑥: Fiber Jacket on Port 1 & 2
B - Bare Fiber
C - 900um Red Loose Tube
S - Specify

⑦: Fiber Type
2A - PM 1300
3A - PM 1550
S - Specify

⑧: Fiber Length
0.8 - 0.8m
S - Specify

⑨⑨: Package Type
01 - Ø5.5×35
08 - 80×12×10

# High Power Polarization Insensitive Isolator 15xxnm 1~10W

Spec No.: CAT-05-004G Date:

**Specifications**

| Parameters | Unit | Values | |
|---|---|---|---|
| Stage | - | Single Stage | Dual Stage |
| Center Wavelength | nm | 1310, 1480, 1550, 1590, 1620 | |
| Operating Wavelength Range | nm | ±20 | |
| Typ. Peak Isolation | dB | 42 | 58 |
| Min. Isolation at 23℃ | dB | 28 | 48 |
| Typ. Insertion Loss at 23℃ | dB | 0.35 | 0.4 |
| Max. Insertion Loss at 23℃,λ c | dB | 0.5 | 0.6 |
| Min. Return Loss (Input/Output) | dB | 57 / 55 | 57 / 55 |
| Max. PDL at 23℃ | dB | 0.08 | 0.1 |
| Max. PMD | ps | 0.2[1] | 0.05 |
| Max. Optical Power (CW) | W | 1, 3, 5, 10 or Specify | |
| Max. Peak Power for ns Pulse | kW | 10 | |
| Max. Tensile Load | N | 5 | |
| Fiber Type | - | SMF-28e Fiber | |
| Operating Temperature | ℃ | -5 to +70 | |
| Storage Temperature | ℃ | -40 to +85 | |

*PMD<0.05ps is available. Please refer to below ordering information.

*Above specifications are for device without connector.

*For devices with connectors, IL will be 0.3dB higher and RL will be 5dB lower and optical power is only 1W(CW).

*For pulse application please discuss with Optizone.

*The material must be RoHS compliant.

**Package Dimensions**

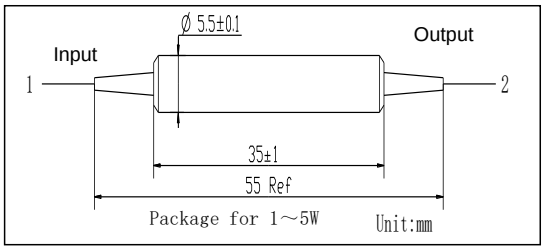


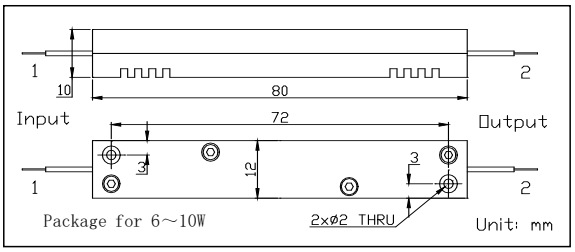


**Ordering Information**

**HPII-**①①①①-②-③-④-⑤⑤-⑥⑥-⑦-⑧-⑨

①①①①: Wavelength
1310 - 1310nm
1480 - 1480nm
1550 - 1550nm
S - Specify

②: Stage
S - Single Stage
D - Dual Stage

③: Power Level
1 - 1W
3 - 3W
5 - 5W
10 - 10W
S - Specify

④: PMD
1 - 0.05ps Max.
2 - Refer to above Spec.

⑤⑤: Connector Type on Port 1 & 2
1B - FC/UPC
2B - FC/APC
3D - SC/UPC
4D - SC/APC
N - None
S - Specify

⑥⑥: Fiber Jacket on Port 1 & 2
B - 250um Bare Fiber
F - 900um White Loose Tube
T - 3mm Yellow Cable
S - Specify

⑦: Fiber Type
5 - SMF-28e Fiber

⑧: Fiber Length
1 - 1m
S - Specify

⑨: Package Type
01 - Ø5.5×35
08 - 80×12×10
10 - Ø5.5x35(Without rub)
S - Specify

# Polarization Maintaining Isolator 19xx~20xx 1W

Spec No.: CAT-10-013D Date:

**Specifications**

| Parameters | Unit | Values | |
|---|---|---|---|
| Stage | | Single Stage | Dual Stage |
| Center Wavelength (λc) | nm | 2000 | |
| Operating Wavelength Range | nm | ±50 | |
| Min. Isolation at 23℃ | dB | 18 | 32 |
| Typ. Insertion Loss at 23℃ | dB | 0.8 | 1.0 |
| Max. Insertion Loss at -5℃-70℃ | dB | 1.1 | 1.3 |
| Min. Extinction Ratio(only for B type) | dB | 18 | |
| Min. Extinction Ratio(only for F type) | dB | 20 | |
| Min. Return Loss (Input/Output) | dB | 50/50 | |
| Max. Optical Power (CW) | mW | 500 | |
| Max. Tensile Load | N | 5 | |
| Fiber Type | | PM 1550 Fiber , PM 1950 Fiber or Specify | |
| Operating Temperature | ℃ | -5 to +70 | |
| Storage Temperature | ℃ | -40 to +85 | |

*Above specifications are for device without connector.

*For devices with connectors, IL will be 0.3dB higher, RL will be 5dB lower and ER will be 2dB lower.

*The PM fiber and the connector key are aligned to the slow axis.

* The material must be RoHS compliant.

**Package Dimensions**

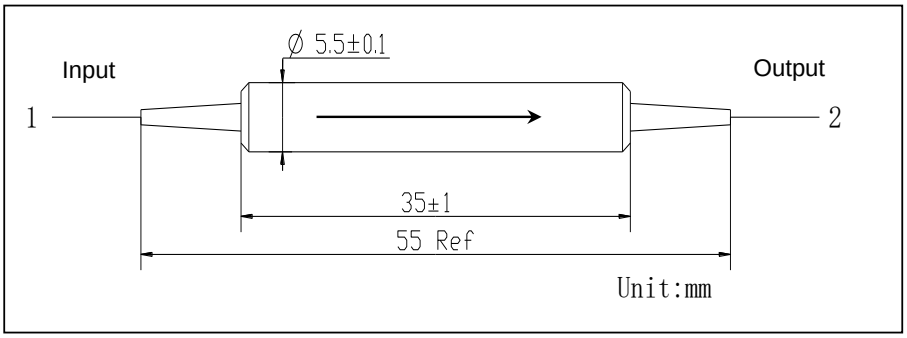


**Ordering Information**

**PMI**-①-②-③-④④-⑤⑤-⑥-⑦-⑧⑧

①: Wavelength
2000 - 2000nm
S - Specify

②: Stage
S - Single Stage
D - Dual Stage

③: Axis Alignment
F - Fast Axis Blocked
B - Both Axis Working

④④: Connector Type on Port 1 &2
1B - FC/UPC
2B - FC/APC (Step)
3D - SC/UPC
4D - SC/APC (Step)
N - None
S - Specify

⑤⑤: Fiber Jacket on Port 1 &2
B - Bare Fiber
C - 900um Red Loose Tube
SS - Specify

⑥: Fiber Type
3B - PM 1550
B10 - PM 1950
S - Specify

⑦: Fiber Length
0.8 - 0.8m
S - Specify

⑧⑧: Package Type
01 - Ø5.5×35
S - Specify

# High Power Polarization Insensitive Isolator 19xx~20xxnm 1~10W

Spec No.: CAT-05-057C Date:

**Specifications**

| Parameters | Units | Values | |
|---|---|---|---|
| Stage | - | Single Stage | Dual Stage |
| Center Wavelength | nm | 2000 | |
| Operating Wavelength Range | nm | ±50 | |
| Min. Isolation at 23℃ | dB | 18 | 32 |
| Typ. Insertion Loss at 23℃ | dB | 0.8 | 1.0 |
| Max.Insertion Loss | dB | 1.2 | 1.4 |
| Max.Polarization Dependent Loss | dB | 0.15 | 0.20 |
| Min. Return Loss (Input/Output) | dB | 50 / 50 | 50 / 50 |
| Max. Optical Power (CW) | W | 1, 3, 5 or Specify | |
| Max. Tensile Load | N | 5 | |
| Fiber Type | - | SMF-28e Fiber or SM 1950 Fiber | |
| Operating Temperature | ℃ | -5 to +70 | |
| Storage Temperature | ℃ | -40 to +85 | |

*Above specifications are for device without connector.

*For devices with connectors, IL will be 0.3dB higher, RL will be 5dB lower, optical power is only 1W.

*The material must be RoHS compliant.

**Package Dimensions**

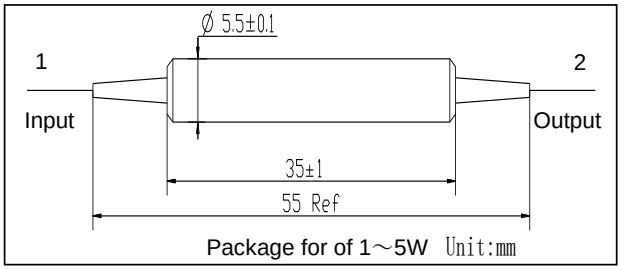


Package for of 1～5W Unit:mm

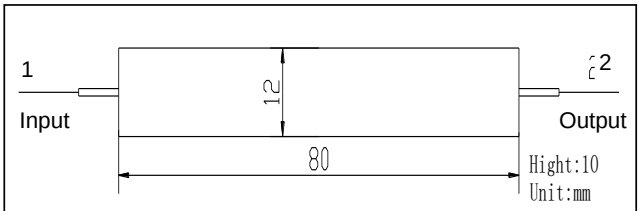


Package for of 6～10W

**Ordering Information**

**HPII**-①①①①-②-③③-④④-⑤⑤-⑥-⑦-⑧

①①①①: Wavelength
2000 - 2000nm
S - Specify

②: Stage
S - Single Stage
D - Dual Stage

③③: Handling Power
01 - 1W
05 - 5W
10 - 10W
SS - Specify

④④: Connector Type on Port 1 & 2
1A - FC/UPC
2A - FC/APC
3D - SC/UPC
4D - SC/APC
N - None
S - Specify

⑤⑤: Fiber Jacket on Port 1 & 2
B - Bare Fiber
C - 900um Red Loose Tube
F - 900um White Loose Tube
SS - Specify

⑥: Fiber Type
5 - SMF-28e Fiber
K2 - SM 1950 Fiber
M4 - Nufern SM-GDF-10/130-15M NA0.15
S - Specify

⑦: Fiber Length
0.8 - 0.8m
S - Specify

⑧: Package Type
01 - Ø5.5×35
08 - 80*12*10

# High Power Polarization Maintaining Isolator 19xx~20xxnm 1~10W

Spec No.: CAT-10-018C Date:

**Specifications**

| Parameters | Unit | Values | |
|---|---|---|---|
| Stage | - | Single Stage | Dual Stage |
| Center Wavelength (λc) | nm | 2000 | |
| Operating Wavelength Range | nm | ±50 | |
| Min. Isolation at 23℃ | dB | 18 | 32 |
| Typ. Insertion Loss at 23℃ | dB | 0.8 | 1.0 |
| Max. Insertion Loss at -5℃-70℃ | dB | 1.2 | 1.4 |
| Min. Extinction Ratio(only for B type) | dB | 18 | |
| Min. Extinction Ratio(only for F type) | dB | 20 | |
| Min. Return Loss (Input/Output) | dB | 50/50 | |
| Max. Optical Power (CW) | W | 1, 5 or Specify | |
| Max. Tensile Load | N | 5 | |
| Fiber Type | - | PM 1550 Fiber , PM 1950 Fiber or Specify | |
| Operating Temperature | ℃ | -5 to +70 | |
| Storage Temperature | ℃ | -40 to +85 | |

*Above specifications are for device without connector.

*For devices with connectors, IL will be 0.3dB higher, RL will be 5dB lower, ER will be 2dB lower. Optical power is only 1W(CW).

*The PM fiber and the connector key are aligned to the slow axis.

*For F type, fast axis is blocked, the input must be Linear polarized light, and the input polarization must be aligned properly.

* The material must be RoHS compliant.

**Package Dimensions**

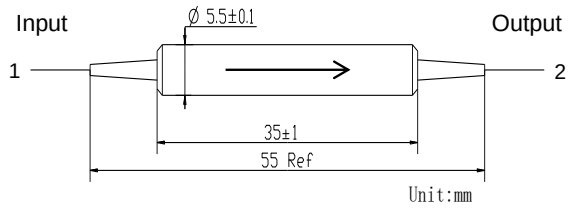


Package for 1～5W

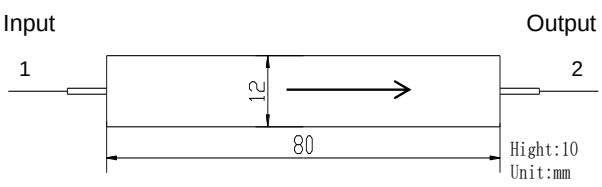


Package for 6～10W

**Ordering Information**

**HPMI**-①-②-③③-④-⑤⑤-⑥⑥-⑦-⑧-⑨⑨

①: Wavelength
2000 - 2000nm

②: Stage
S - Single Stage
D - Dual Stage

③③:Handling Power
01 - 1W
05 - 5W
SS - Specify

④: Axis Alignment
F - Fast Axis Blocked
B - Both Axis Working

⑤⑤: Connector Type on Port 1 & 2
1B - FC/UPC
2B - FC/APC (Step)
3D - SC/UPC
4D - SC/APC (Step)
N - None
S - Specify

⑥⑥: Fiber Jacket on Port 1 & 2
B - Bare Fiber
C - 900um Red Loose Tube
S - Specify

⑦: Fiber Type
3B - PM 1550
B10 - PM 1950
S - Specify

⑧: Fiber Length
0.8 - 0.8m
S - Specify

⑨⑨: Package Type
01 - Ø5.5×35
08 - 80×12×10

# High Power Polarization Maintaining Collimated Beam Isolator 10xxnm 5~20W

Spec Review No.: SR2311093A Date:Nov, 27, 2023

## Specifications

| Parameters | Unit | Values |
|---|---|---|
| Signal Center Wavelength (λc) | nm | 1030 |
| Pump Operating Wavelength | nm | 976 ±5 |
| Typ. Peak Isolation | dB | 30 |
| Min. Isolation at 23℃ | dB | 25 |
| Min. Transmission at 23°C（Input to Free Spcae） | dB | 0.6 |
| Min. Transmission at 23°C（Pump to Input） | dB | 0.8 |
| Min. Return Loss | dB | 50 |
| Min. Extinction Ratio (only for F Type) | dB | 20 |
| Nominal Output Beam Diameter (1/e^2) | mm | 5.7+/-0.3 |
| Nominal Divergence Angle (Full Angle) | mrad | ≤0.3 |
| Min. Ellipticity | % | 95 |
| Max. Average Signal Optical Power | W | 5 |
| Max. Optical Power (pulse) | kW | 10 |
| Max. Average Pump Optical Power | W | 20 |
| Operating Temperature | ℃ | -5 to +50 |
| Storage Temperature | ℃ | -20 to +75 |

*The dimensions of beam expanders are dependent on the required beam diameter, detailed informations pls contact Optizone or see the shipment data sheet.

*The optical path is aligned to slow axis and fast axis is blocked.

*The material must be RoHS compliant.

## Package Dimensions

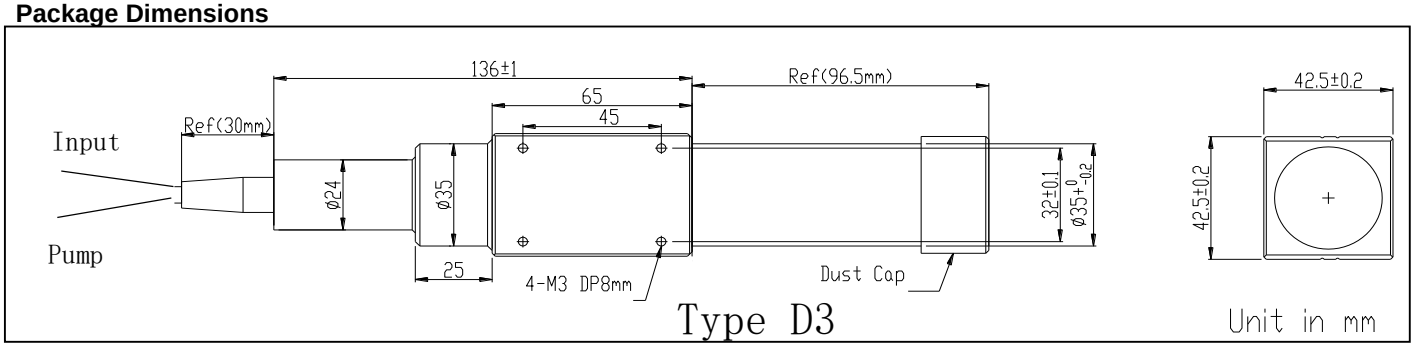


## Ordering Information

**HPMCI**-①①-②②-③③-④-⑤⑤-⑥-⑦-⑧/⑧-⑨

①①: Wavelength
9703 - 976/1030nm
SS - Specify

②②: Package Type
D3 - Type D3

③③: Handling Power
05 - 5W
20 - 20W

④: Axis Alignment
F - Fast Axis Blocked

⑤⑤: Output Beam Diameter
57 - 5.7mm
S - Specify

⑥: Fiber Jacket
C - 900um Loose tube（Red）
H - 900um Loose tube（Green）

⑦: Fiber Length
0.8 - 0.1m 900um loose tube
&0.7m Bare Fiber

⑧/⑧:Fiber Type
S - PLMA-YDF-30/250-GDF
S109 - MMF-105/125 NA0.22 fiber

⑨: Output Polarization
V - Vertical
H - Horizontal

# High Power Polarization Insensitive Collimated Beam Isolator 10xxnm 5~20W

Spec Review No.: SR1505002C Date: Jun. 09, 2023

## Specifications

| Parameters | Unit | Values | |
|---|---|---|---|
| Center Wavelength (λc) | nm | 1064 | |
| Operating Wavelength Range | nm | ±10 | |
| Min. Peak Isolation @ 23℃ | dB | 30~35 | |
| Min. Isolation @ 23℃ | dB | 25 | |
| Min. Dynamic Isolation @ 23℃ | dB | 25 | 20 |
| Min. Transmission @ 23℃ | - | 90% | |
| Min. Transmission @ 635nm | - | 15% | |
| Max. Polarizaiton Dependent Loss | dB | 0.1 | |
| Min. Return Loss | dB | 50 | |
| Nominal Output Beam Diameter @0~1m WD | mm | 4.0±0.5 | |
| Output Beam Ellipticity | - | ⩾90% | |
| Beam Divergence | mrad | 0.5 | |
| Max. Optical Average Power | W | 20 | |
| Max. Peak Power | kW | <20 | |
| Pulse Widths | ns | 100.0 | |
| Repetition Rate | kHz | 20~80 | |
| Nominal $M^2$ Degradation@20W | - | <15% | |
| Fiber Type | - | SCF-UN-20/250-08 Fiber | SCF-UN-20/250-11 Fiber |
| Fiber Pull Force | N | 5 | |
| Operating Temperature | ℃ | 10 to +50 | |
| Storage Temperature | ℃ | -10 to +70 | |

*For different pulse applications, pls discuss with Optizone Technology.

*The dimensions of beam expanders are dependent on the required beam diameter,detailed informations pls contact Optizone or see the shipment data sheet.

*The material must be RoHS compliant.

## Package Dimensions

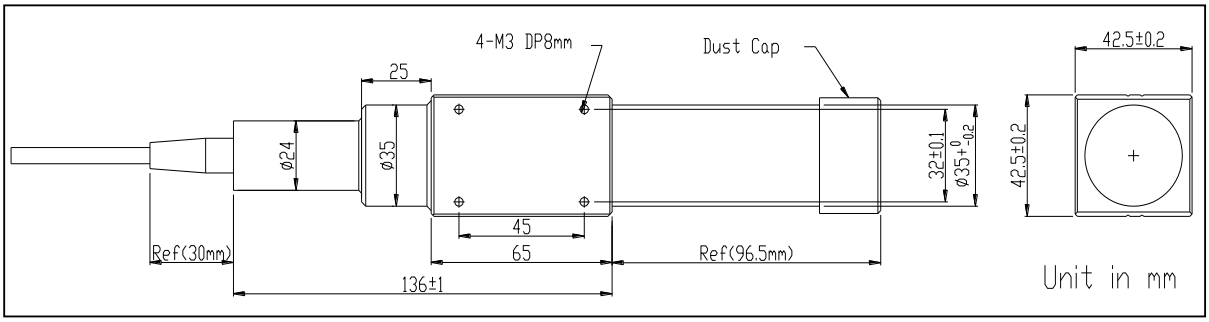


## Ordering Information

**HPICI**-①①-②②-③③-④④-⑤-⑥-⑦

①①: Wavelength
0663 - 1064/635nm
S - Specify

②②: Package Type
D3 - Type D3

③③: Handling Power
20 - 20W
S - Specify

④④: Output Beam Diameter
40 - 4.0mm
S - Specify

⑤: Fiber Jacket
6 - 6mm Armoured Cable

⑥: Fiber Length
4 - 3.2m 6mm Armoured Cable & 2.6mm Loose Tube , 0.8m Bare Fiber
S - Specify

⑦:Fiber Type
53 - SCF-UN-20/250 NA0.11 Fiber

# High Power Polarization Maintaining Collimated Beam Isolator 10xxnm 20W

Spec Review No.: SR2311031A Date:Nov. 13, 2023

## Specifications

| Parameters | Unit | Values |
|---|---|---|
| Operating Wavelength Range | nm | 1064±5 |
| Min. Isolation at 23℃ | dB | 28 |
| Min. Transmission@976nm | - | 83% |
| Min. Transmission@1064nm | - | 90% |
| Min. Return Loss | dB | 50 |
| Min. Extinction Ratio (only for F Type) | dB | 22 |
| Nominal Output Beam Diameter (1/e^2) | mm | 1.8+/-0.3 @ 0~1000mm |
| Nominal Output Beam Divergence | mrad | <0.3 |
| Ellipticity | - | ⩾95% |
| Nominal $M^2$ Degradation | - | ⩽10% |
| Max. Optical Average Power | W | 5 |
| Max. Peak Power for ns Pulse | KW | 50 |
| Operating Temperature | ℃ | -5 to +50 |
| Storage Temperature | ℃ | -20 to +75 |

* For special pulse applications, pls discuss with Optizone Technology.
* The optical path is aligned to slow axis and fast axis is blocked.
* The material must be RoHS compliant.

## Package Dimensions

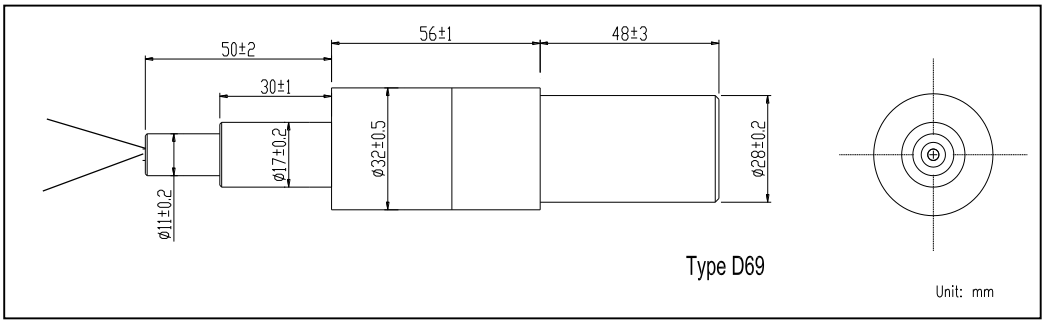


## Ordering Information

**HPMCI**-①①-②②-③③-④-⑤⑤-⑥-⑦-⑧

①①: Wavelength
97 - 976nm pump
06 - 1064nm

②②: Package Type
D69 - Type D69

③③: Handling Power
05 - 5W
SS - Specify

④: Axis Alignment
F - Fast Axis Blocked

⑤⑤: Output Beam Diameter
18 - 1.8mm

⑥: Fiber Jacket
C - 900um Loose Tube（Red）
H - 900um Loose Tube（Green）

⑦: Fiber Length
1 - 1m 900um Loose Tube & Bare Fiber

⑧:Fiber Type
61 - YDF Nufern PM 10/125 NA0.075
S109 - MMF-105/125 NA0.22 fiber
S - Specify

# High Power Polarization Insensitive Collimated Beam Isolator 10xxnm 20W

Spec Review No.: SR2208010C Date: Nov.01, 2023

**Specifications**

| Parameters | Unit | Values |
|---|---|---|
| Center Wavelength (λc) | nm | 1064 |
| Operating Wavelength Range | nm | ±10 |
| Min. Isolation at λc ,25℃ | dB | 30~35 |
| Min. Isolation at 25℃ | dB | 25 |
| Min. Transmission at 25℃ | - | 90% |
| Min. Return Loss at 1064nm | dB | 50 |
| Max. Polarizaiton Dependent Loss | dB | 0.1 |
| Beam Pointing Accuracy | deg | +/-0.2 With Respect to Bottom and Rear Sides |
| Output Beam Diameter(1/e^2)@5~1200mm WD | mm | 2.0+/-0.2 |
| Beam Divergence (86.5% of Power)@500~1200mm WD | mrad | ≤0.9 |
| Max. Optical Average Power | W | 20 |
| Max. Peak Power for ns Pulse | kW | 15 @ 7ns |
| Max.Energy | mJ | 1.0 |
| Repetition Rate | kHz | 0.5~1000 |
| Operating Temperature | ℃ | 0 to +50 |
| Storage Temperature | ℃ | -40 to +60 |

*Make sure that the dust cap is removed before operation.

*For devices with connectors, IL will be 0.5dB higher, RL will be 5dB lower, handling power will be only 1W(CW).

*Fix the crystal with ED-057 glue.

*The material must be RoSH compliant.

**Package Dimensions**

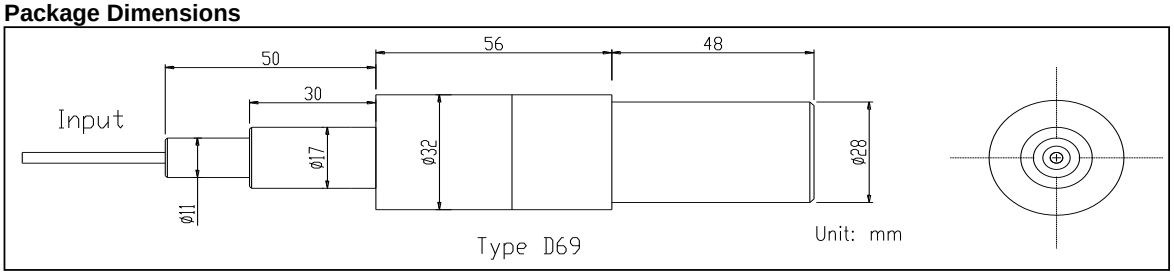


**Ordering Information**

**HPICI**-①①-②②②-③③-④④-⑤⑤-⑥-⑦-⑧

①①: Wavelength
06 - 1064nm
SS - Specify

②②②: Package Type
D69 - Type D69

③③: Handling Power
20 - 20W
SS - Specify

④④: Output Beam Diameter
20 - 20mm

⑤⑤: Fiber Jacket
3 - 3mm Armoured Cable

⑥: Fiber Length
1 - 1.0m

⑦:Max.Energy
1 - 0.5mJ

⑧:Fiber Type
20 - DCF-UN-20/125, NA 0.11
S - Specify

# High Power Polarization Maintaining Collimated Beam Isolator 10xxnm 50W

Spec Review No.: SR2304019A Date:Apr. 07, 2023

## Specifications

| Parameters | Unit | Values |
|---|---|---|
| Operating Wavelength Range | nm | 1064±5 |
| Min. Isolation at 23℃ | dB | 28 |
| Min. Transmission @1064nm | - | 93% |
| Min. Transmission @635nm | - | 5% |
| Min. Return Loss | dB | 50 |
| Min. Extinction Ratio (only for F Type) | dB | 22 |
| Nominal Output Beam Diameter (1/e^2) | mm | 10±1@ 0~2000mm |
| Nominal Output Beam Divergence | mrad | <0.03 |
| Ellipticity | - | ⩾93% |
| Nominal $M^2$ Degradation | - | ⩽10% |
| Max. Optical Average Power | W | 50 |
| Max. Peak Power for ns Pulse | KW | 50 |
| Fiber Type | - | PLMA-GDF-25/250-UF,NA0.75 |
| Operating Temperature | ℃ | 10 to +50 |
| Storage Temperature | ℃ | -20 to +50 |

*Above parameter only for inner core.

*For special pulse applications, pls discuss with Optizone Technology.

*The optical path is aligned to slow axis and fast axis is blocked.

*The material must be RoHS compliant.

## Package Dimensions

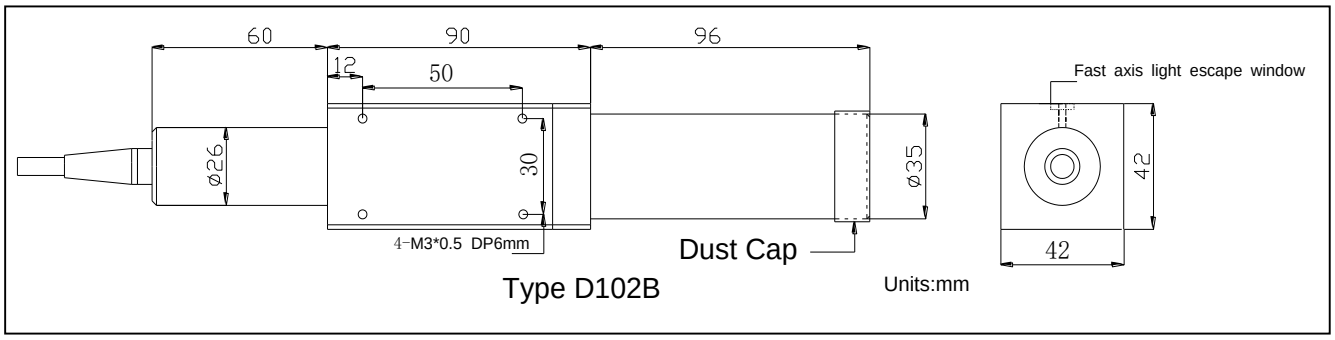


## Ordering Information

**HPMCI**-①①-②②-③③-④-⑤⑤-⑥-⑦-⑧-⑨

①①: Wavelength
06- 1064nm
SS - Specify

②②: Package Type
D102B - Type D102B

③③: Handling Power
50 - 50W
SS - Specify

④: Axis Alignment
F - Fast Axis Blocked

⑤⑤: Output Beam Diameter
10 - 10mm

⑥: Fiber Jacket
L - 900um Loose Tube
S - Specify

⑦: Fiber Length
1 - 0.1m 900um Loose Tube
0.9m Bare Fiber

⑧:Fiber Type
S – PLMA-GDF-25/250-UF,NA0.75
S - Specify

⑨: Output Polarization
V - Vertical
H - Horizontal

# High Power Polarization Maintaining Collimated Beam Isolator 10xxnm 100W

Spec Review No.: SR2208063B Date:Apr. 24, 2023

## Specifications

| Parameters | Unit | Values |
|---|---|---|
| Operating Wavelength Range | nm | 1080±5 |
| Min. Isolation at 23℃ | dB | 28 |
| Typ. Transmission @1064nm | - | 93% |
| Min. Transmission @1064nm | - | 90% |
| Min. Transmission @635nm | - | 5% |
| Min. Return Loss | dB | 50 |
| Min. Extinction Ratio (only for F Type) | dB | 22 |
| Nominal Output Beam Diameter (1/e^2) | mm | 0.5±0.1mm@ 5mm |
| Ellipticity | - | ⩾90% |
| Nominal $M^2$ Degradation | - | ⩽10% |
| Max. Optical Average Power | W | 100 |
| Max. Peak Power for ns Pulse | kW | 20 |
| Fiber Type | - | PLMA-GDF 20/130 NA0.08 |
| Operating Temperature | ℃ | 10 to +50 |
| Storage Temperature | ℃ | -20 to +50 |

*Above parameter only for inner core.

*For special pulse applications, pls discuss with Optizone Technology.

*The optical path is aligned to slow axis and fast axis is blocked.

*The material must be RoHS compliant.

## Package Dimensions

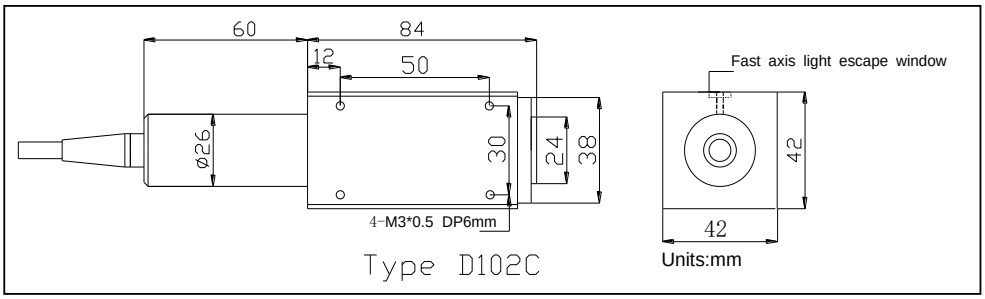


## Ordering Information

**HPMCI**-①①-②②-③③-④-⑤⑤-⑥-⑦-⑧-⑨

①①: Wavelength
0863- 1080/635nm
SS - Specify

②②: Package Type
D102C - Type D102C

③③: Handling Power
100 - 100W
SS - Specify

④: Axis Alignment
F - Fast Axis Blocked
B - Both Axis Working

⑤⑤: Output Beam Diameter
05 - 0.5mm

⑥: Fiber Jacket
C- 900um Loose Tube
S - Specify

⑦: Fiber Length
1.1 - 0.1m 900um Loose Tube
1m Bare Fiber

⑧:Fiber Type
41 –PLMA-GDF 20/130 NA0.08
S - Specify

⑨: Output Polarization
V - Vertical
H - Horizontal

# High Power Polarization Maintaining Collimated Beam Isolator 10xxnm 250W

Spec Review No.: SR2412068A Date:Dec. 26, 2024

## Specifications

| Parameters | Unit | Values |
|---|---|---|
| Operating Wavelength Range | nm | 1064±5 |
| Min. Isolation at 23℃ | dB | 26 |
| Typ. Transmission @1064nm | - | 90% |
| Min. Transmission @1064nm | - | 80% |
| Min. Transmission @635nm | - | 5% |
| Min. Return Loss | dB | 50 |
| Min. Extinction Ratio (only for F Type) | dB | 20 |
| Nominal Output Beam Diameter (1/e^2) | mm | 4±0.5@ 0~2m @250W |
| Nominal Output Beam Divergence | mrad | <0.2 |
| Ellipticity | - | ⩾85%@0~2m |
| Nominal $M^2$ Degradation | - | ⩽20% |
| Max. Optical Average Power | W | 250 |
| Max. Peak Power for ns Pulse | KW | 100 |
| Operating Temperature | ℃ | 10 to +50 |
| Storage Temperature | ℃ | -20 to +50 |

*Above parameter only for inner core.

*For special pulse applications, pls discuss with Optizone Technology.

*The optical path is aligned to slow axis and fast axis is blocked.

*The material must be RoHS compliant.

## Package Dimensions

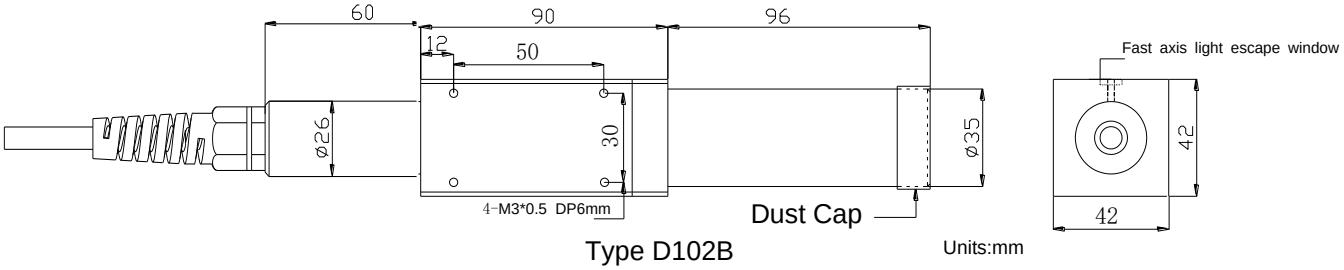


Type D102B

## Ordering Information

**HPMCI**-①①-②-③③③-④-⑤⑤-⑥-⑦-⑧-⑨

①①: Wavelength Range
06 - 1064nm
SS - Specify

②: Package Type
D102B - Type D102B

③③③: Handling Power
250 - 250W
SS - Specify

④: Axis Alignment
F - Fast Axis Blocked

⑤⑤: Output Beam Diameter
40 - 4.0mm
S - Specify

⑥: Fiber Jacket
Q - 3mm Loose Tube
S - Specify

⑦: Fiber Length
1 - 0.1m 3mm Loose Tube
&0.9m Bare Fiber

⑧:Fiber Type
96 - PM GDF 50/400 NA0.11 Fiber
S - Specify

⑨: Output Polarization
V - Vertical
H - Horizontal

# High Power Polarization Maintaining Collimated Beam Isolator 10xxnm 500W

Spec Review No.: SR2311054A Date: Nov. 16, 2023

## Specifications

| Parameters | Unit | Values |
|---|---|---|
| Center Wavelength (λc) | nm | 1064 |
| Operating Wavelength Range | nm | ±10 |
| Min. Isolation at 23℃ | dB | 30 |
| Min. Transmission @ 1064nm | | 93% |
| Min. Transmission @ 635nm | - | 5% |
| Min. Return Loss | dB | 50 |
| Nominal Output Beam Diameter (1/e^2)@0~1m WD | mm | 3.0±0.5 |
| Ellipticity From Output Surface | - | >92% |
| Min. Extinction Ratio (only for F Type) | dB | 25 |
| Nominal $M^2$ Degradation | - | <10% |
| Max. Optical Average Power @ 1064nm | W | 500 |
| Max. Water Pressure | Bar | 8 |
| Flow of Water | L/min | 1.5-3 |
| Max Peak Power for ns Pulse | kW | 100 |
| Max Pulse Energy | mJ | 2 |
| Cable Tensile Load | N | 50 |
| Operating Temperature | ℃ | 10 to 50 |
| Storage Temperature(non-condensing) | ℃ | -20 to +50 |

*Above parameter only for inner core.

*For special pulse applications, pls discuss with Optizone Technology.

*The optical path is aligned to slow axis and fast axis is blocked.

*The material must be RoHS compliant.

## Package Dimensions

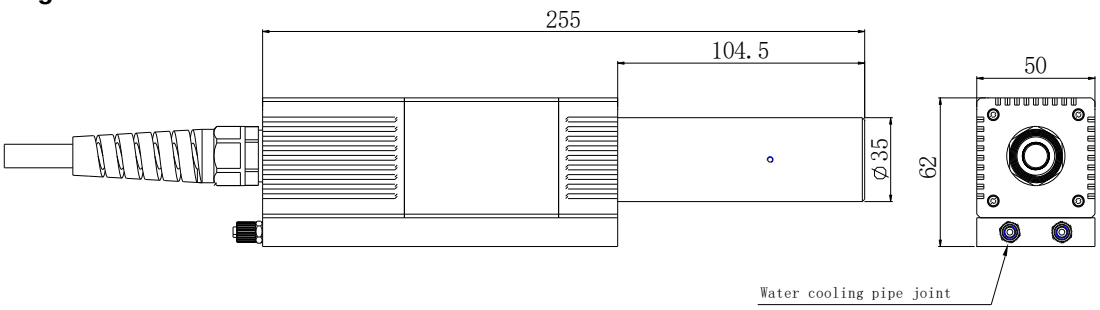


Type D227B Units:mm

## Ordering Information

**HPMCI**-①①①①-②②②-③③③-④④-⑤-⑥-⑦−⑧−⑨

①①①①: Wavelength
06 - 1064nm
SS - Specify

④: Axis Alignment
F - Fast Axis Blocked

⑦: Fiber Length
4.5 - 3m 10mm Armoured Cable
& 1.8mm Loose Tube
1.5m Bare Fiber

②②②: Package Type
D227B - Type D227B

⑤⑤: Output Beam Diameter
30 - 3.0mm
SS - Specify

⑧⑧:Fiber Type
48 - PLMA-GDF 30/250-M NA0.06

③③③: Handling Power
500 - 500W
SS - Specify

⑥: Fiber Jacket
10 - 10mm Armoured Cable
S - Specify

⑨: Output Polarization
V - Vertical
H - Horizontal

# High Power Polarization Insensitive Collimated Beam Isolator 10xxnm 500W

Spec Review No.: SR2406046A Date: Jun . 28 , 2024

## Specifications

| Parameters | Unit | Values |
|---|---|---|
| Center Wavelength (λc) | nm | 1064 |
| Operating Wavelength Range | nm | ±10 |
| Min. Isolation | dB | 30 |
| Min. Transmission @ 1064nm | - | 95% |
| Min. Transmission @ 635nm | - | 20% |
| Min. Return Loss | dB | 50 |
| Nominal Output Beam Diameter (1/e^2)@0~1m WD | mm | 7.0±0.5 |
| Ellipticity From Output Surface | - | >92% |
| Nominal $M^2$ Degradation | - | <10% |
| Max. Optical Average Power @ 1064nm | W | 500 |
| Max. Water Pressure | Bar | 8 |
| Flow of Water | L/min | 1.5-3 |
| Max Peak Power for ns Pulse | kW | 100 |
| Max Pulse Energy | mJ | 2 |
| Cable Tensile Load | N | 50 |
| Operating Temperature | ℃ | 10 to 50 |
| Storage Temperature(non-condensing) | ℃ | -10 to +70 |

*The dimensions of beam expanders are dependent on the required beam diameter,detailed informations pls contact Optizone or see the shipment data sheet.

*The material must be RoHS compliant.

## Package Dimensions

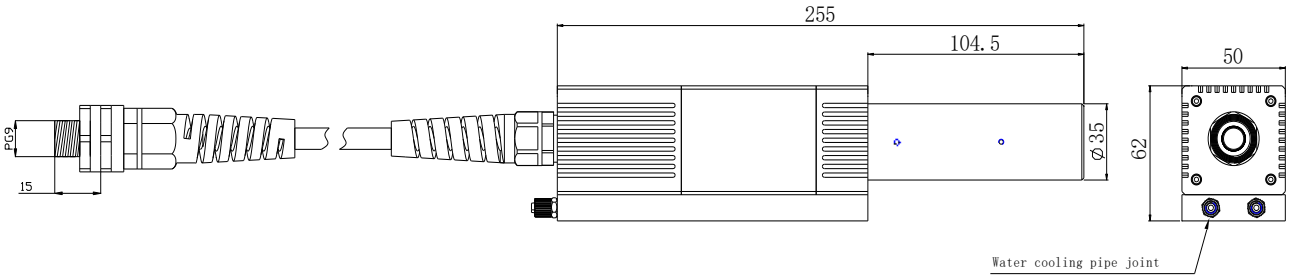


Type D227B Units:mm

## Ordering Information

**HPICI**-①①①①-②②②-③③③-④④-⑤-⑥-⑦⑦

①①①①: Wavelength
0663 - 1064/635nm
SS - Specify

②②②: Package Type
D227B - Type D227B

③③③: Handling Power
500 - 500W
SS - Specify

④④: Output Beam Diameter
70 - 7.0mm
SS - Specify

⑤: Fiber Jacket
8 - 8mm Armoured Cable
S - Specify

⑥: Fiber Length
6.5 - 5m 10mm Armoured Cable & 1.8mm Loose Tube
1.5m Bare Fiber

⑦⑦: Fiber Type
107 - YOFC GDF_DC 30/250-0.065
SS - Specify

# High Power Polarization Insensitive Collimated Beam Isolator 10xxnm 1000W

Spec Review No.: SR2405032A Date: May. 22, 2024

## Specifications

| Parameters | Unit | Values |
|---|---|---|
| Center Wavelength (λc) | nm | 1064 |
| Operating Wavelength Range | nm | ±10 |
| Min. Isolation | dB | 30 |
| Min. Transmission @ 1064nm | - | 95% |
| Min. Transmission @ 635nm | - | 20% |
| Min. Return Loss | dB | 50 |
| Nominal Output Beam Diameter (1/e^2)@0~1m WD | mm | 10±0.5 |
| Ellipticity From Output Surface | - | >92% |
| Nominal $M^2$ Degradation | - | <10% |
| Max. Optical Average Power @ 1064nm | W | 1000 |
| Max. Water Pressure | Bar | 8 |
| Flow of Water | L/min | 1.5-3 |
| Max Peak Power for ns Pulse | kW | 100 |
| Max Pulse Energy | mJ | 2 |
| Cable Tensile Load | N | 100 |
| Operating Temperature | ℃ | 10 to 50 |
| Storage Temperature(non-condensing) | ℃ | -10 to +70 |

*The dimensions of beam expanders are dependent on the required beam diameter,detailed informations pls contact Optizone or see the shipment data sheet.

*The material must be RoHS compliant.

## Package Dimensions

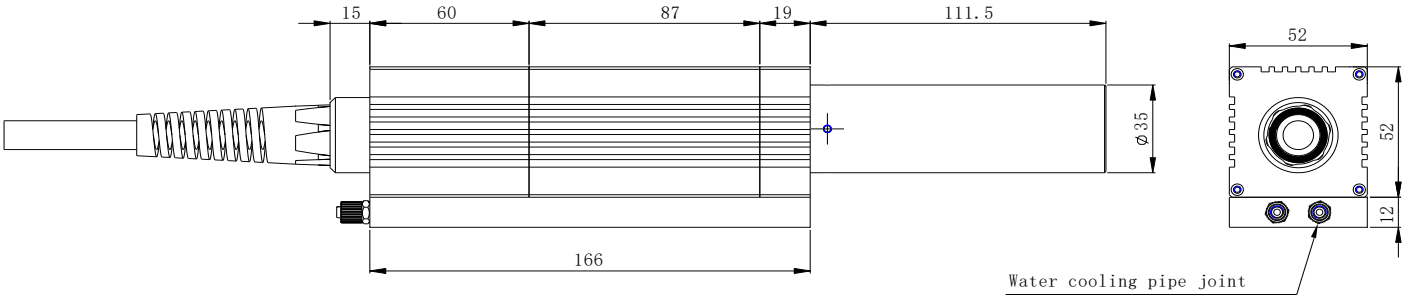


Type D219A

Unit in:mm

## Ordering Information

**HPICI**-①①①①-②②②-③③③-④④-⑤-⑥-⑦

①①①①: Wavelength
0663 - 1064/635nm
SS - Specify

④④: Output Beam Diameter
100 - 10.0mm
SS - Specify

⑥: Fiber Length
6.5 - 5m 10mm Armoured Cable & 1.8mm Loose Tube
1.5m Bare Fiber

②②②: Package Type
D219A - Type D219A

③③③: Handling Power
1000 - 1000W
SS - Specify

⑤: Fiber Jacket
9.2 - 9.2mm Armoured Cable
S - Specify

⑦:Fiber Type
116 - BrightCore 30/250 NA0.06
S - Specify

# High Power Polarization Insensitive Collimated Beam Isolator 10xxnm 20W

Spec Review No.: SR2208009C

Date: Nov.01, 2023

## Specifications

| Parameters | Unit | Values |
|---|---|---|
| Center Wavelength (λc) | nm | 1064 |
| Operating Wavelength Range | nm | ±10 |
| Min. Isolation at 25℃ | dB | 30 |
| Min. Isolation at 0~40℃ | dB | 28 |
| Min. Transmission at 25℃ | - | 92% |
| Min. Return Loss at 1064nm | dB | 50 |
| Max. Polarizaiton Dependent Loss | dB | 0.1 |
| Beam Pointing Accuracy | deg | +/-0.2 With Respect to Bottom and Rear Sides |
| Output Beam Diameter(1/e^2) | mm | 0.39+/-0.05 @ 5mm WD |
| Waist Position(Output Surface Reference) | mm | 0~5 |
| Beam Divergence (86.5% of Power) | mrad | 3.4+/-0.6 |
| Max. Optical Average Power | W | 20 |
| Max. Peak  Power for ns Pulse | kW | 25 |
| Max.Energy | mJ | 0.5 |
| Repetition Rate | kHz | 0.5~1000 |
| Operating Temperature | ℃ | 0 to +50 |
| Storage Temperature | ℃ | -40 to +60 |

*Make sure that the dust cap is removed before operati

*For devices with connectors, IL will be 0.5dB higher, RL will be 5dB lower, handling power will be only 1W(CW).

*Fix the crystal with ED-057 glue.

*The material must be RoSH compliant.

## Package Dimensions

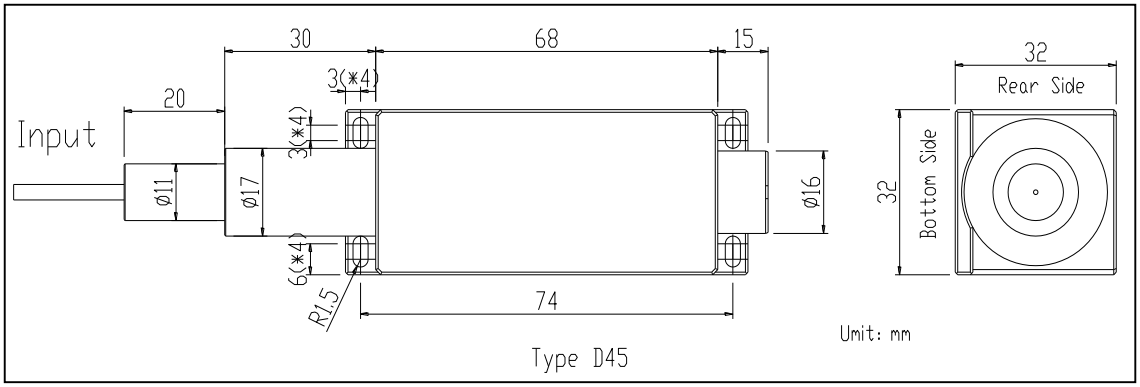


## Ordering Information

**HPICI**-①①-②②②-③③-④④-⑤⑤-⑥-⑦-⑧

①①: Wavelength
06 - 1064nm
SS - Specify

②②②: Package Type
D45 - Type D45

③③: Handling Power
20 - 20W
SS - Specify

④④: Output Beam Diameter
039 - 0.39mm
SS - Specify

⑤⑤: Fiber Jacket
T - 3mm Loose Cable
S - Specify

⑥: Fiber Length
1 - 1.0m
S - Specify

⑦:Max.Energy
1 - 0.5mJ

⑧: Fiber Type
20 - DCF 20/125,NA0.11 Fiber
S - Specify

# High Power Polarization Maintaining Dual Stage Collimated Beam Isolator 10xxnm 20W

Spec Review No.: SR2209005A Date:Sept 2, 2022

## Specifications

| Parameters | Unit | Values |
|---|---|---|
| Center Wavelength (λc) | nm | 1030 |
| Operating Wavelength Range | nm | ±5 |
| Typ. Peak Isolation | dB | 50 |
| Min. Isolation at 23℃ | dB | 45 |
| Typ. Transmission | - | 90% |
| Min. Transmission | - | 88% |
| Min. Return Loss | dB | 50 |
| Min. Extinction Ratio (only for F Type) | dB | 20 |
| Nominal Output Beam Diameter (1/e^2) | mm | 0.8+/-0.2 @300mm from Output Surface |
| Nominal Divergence Angle (Full Angle) | mrad | ≤0.5 |
| Min. Ellipticity | - | 0.90 |
| Max. Optical Power (CW) | W | 20 |
| Max. Optical Power (pulse) | kW | 1 000@ 100ps |
| Fiber Type | - | PLMA-GDF 30/250 NA0.06 |
| Operating Temperature | ℃ | 0 to +50 |
| Storage Temperature | ℃ | -20 to +75 |

*For special pulse applications, pls discuss with Optizone Technology.

*The dimensions of beam expanders are dependent on the required beam diameter, detailed informations pls contact Optizone or see the shipment data sheet.

*The optical path is aligned to slow axis and fast axis is blocked.

*The material must be RoHS compliant.

## Package Dimensions

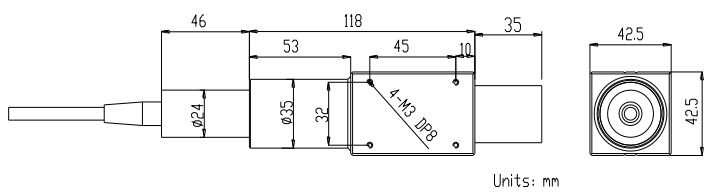


Type D59A

## Ordering Information

**HPMCI**-①①-②②-③③-④-⑤⑤-⑥-⑦-⑧

①①: Wavelength
03 - 1030nm

②②: Package Type
D59A - Type D59A

③③: Handling Power
20 - 20W

④: Axis Alignment
F - Fast Axis Blocked

⑤⑤: Output Beam Diameter
08- 0.8mm

⑥: Fiber Jacket
B - 6mm Armoured Cable

⑦: Fiber Length
1 - 0.1m 900um Loose Tube &0.9m Bare Fiber

⑧:Fiber Type
32 - PLMA-GDF 30/250 NA0.06

⑨: Output Polarization
V - Vertical
H - Horizontal

# High Power Dual Stage Collimated Beam Isolator 10xxnm 20W

Spec Review No.: SR1406007B Date: May, 31, 2024

## Specifications

| Parameters | Unit | Values | |
|---|---|---|---|
| Center Wavelength (λc) | nm | 1064 | |
| Operating Wavelength Range | nm | ±10 | |
| Typ. Peak Isolation | dB | 50 | |
| Min. Isolation @ 25℃ | dB | 45 | |
| Min. Dynamic Isolation @ 25℃ | dB | 25 | 20 |
| Typ. Transmission | - | 88% | |
| Min. Transmission | - | 85% | |
| Norminal Transmission @ 635nm | - | 5% | |
| Min. Return Loss | dB | 50 | |
| Max. Polarizaiton Dependent Loss | dB | 0.1 | |
| Nominal Output Beam Diameter @ 0~1m WD | mm | 7.5+/-0.5mm | |
| Max. Optical Power(CW) | W | 30 | |
| Operating Temperature | ℃ | -5 to +50 | |
| Storage Temperature | ℃ | -20 to +75 | |

*No plastic cap on the ends of the component if 3mm jacketed is chosen;

*If special pulse power is applied, please discuss with Optizone;

*Package size indicated is for standard choose, if special size is required, please discuss with Optizone.

*The material must be RoHS compliant.

## Package Dimensions

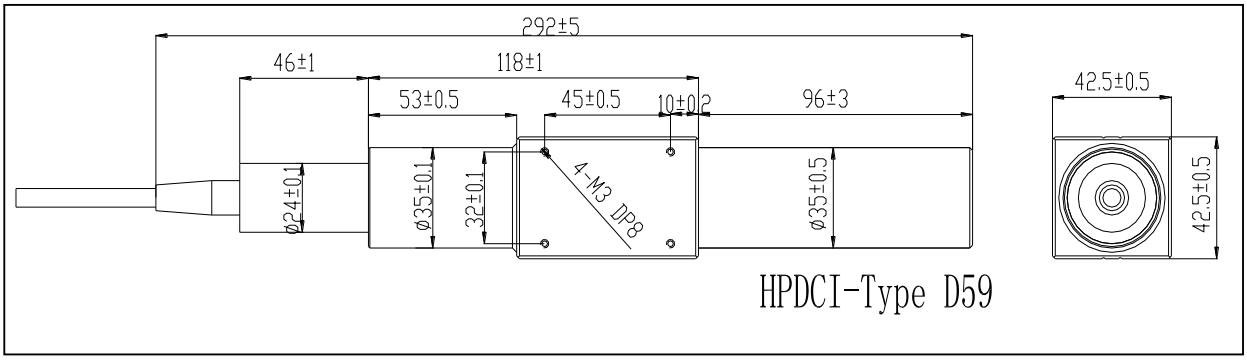


## Ordering Information

**HPDCI**-①①-②②-③③-④④-⑤⑤-⑥-⑦

①①: Wavelength
0663 - 1064/635nm
SS - Specify

②②: Package Type
D59 - Type D59

③③: Handling Power
30 - 30W
SS - Specify

④④: Output Beam Diameter
75 - 7.5mm
SS - Specify

⑤⑤: Fiber Jacket on Port 1 & 2
6 - 6mm Armoured Cab
S - Specify

⑥: Fiber Length
4 - 3.2m 6mm Armoured Cable &
2.6mm Loose tube
0.8m Bare Fiber
S - Specify

⑦: Fiber Type
53 - SCF-UN-20/250 NA0.11
S - Specify

# High Power Polarization Insensitive Collimated Beam Isolator 10xxnm 200W

Spec Review No.: SR2405009A Date: May. 08,2024

## Specifications

| Parameters | Unit | Values |
|---|---|---|
| Center Wavelength (λc) | nm | 1064 |
| Operating Wavelength Range | nm | ±5 |
| Min. Isolation @ 25℃ | dB | 28 |
| Typ. Transmission at 1064nm | - | 95% |
| Min. Return Loss | dB | 50 |
| Max. Polarizaiton Dependent Loss | dB | 0.1 |
| Nominal Output Beam Diameter(1/e^2) @200W | mm | 11.5±1 |
| Nominal M2 Degradation | - | <10% |
| Ellipticity | % | >92 |
| Nominal Output Beam Divergence | mrad | <0.3 |
| Max. Optical Power(CW) | W | 200 |
| Peak power | KW | 50 |
| Peak Pulse Energy | mJ | 2.5 |
| Operating Temperature | ℃ | 10 to 50 |
| Storage Temperature | ℃ | -10 to +70 |

*No plastic cap on the ends of the component if 3mm jacketed is chosen;

*If special pulse power is applied, please discuss with Optizone;

*Package size indicated is for standard choose, if special size is required, please discuss with Optizone.

## Package Dimensions

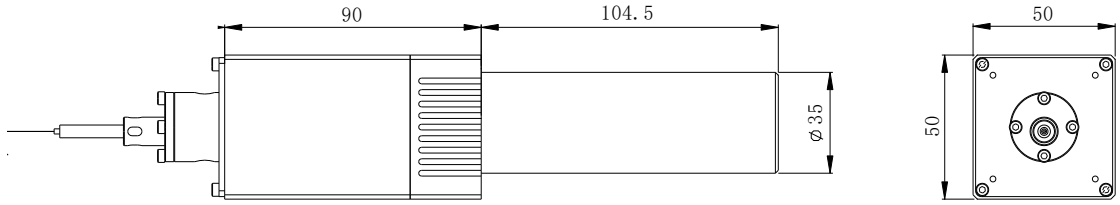


Type D227 Units:mm

## Ordering Information

**HPICI**-①①-②②-③③-④④-⑤-⑥-⑦

①①: Wavelength
06 - 1064nm
SS - Specify

②②: Package Type
D227 - Type D227

③③: Handling Power
200 - 200W
SS - Specify

④④: Output Beam Diameter
115 - 11.5mm
SS - Specify

⑤: Fiber Jacket
B - Bare fiber
S - Specify

⑥: Fiber Length
0.6 - 0.6m bare fiber
S - Specify

⑦: Fiber Type
120 - CJGDF-25/250,NA0.065
S - Specify

# High Power Polarization Insensitive Collimated Beam Isolator 10xxnm 250W

Spec Review No.: SR2303001E Date: Mar. 27, 2024

## Specifications

| Parameters | Unit | Values |
|---|---|---|
| Center Wavelength (λc) | nm | 1064 |
| Operating Wavelength Range | nm | ±10 |
| Min. Isolation | dB | 30 |
| Min. Transmission @ 1064nm | - | 95% |
| Min. Transmission @ 660nm | - | 25% |
| Min. Return Loss | dB | 50 |
| Nominal Output Beam Diameter (1/e^2)@0~1m WD | mm | 7.3±0.5 |
| Ellipticity From Output Surface | - | >92% |
| Nominal $M^2$ Degradation | - | <10% |
| Max. Optical Average Power @ 1064nm | W | 250 |
| Output Beam Degradation@50W/250W | % | ≤10 |
| Nominal Focal Shift of Thermal Lens @ f=300 Lens | mm | ≤2.0 |
| Peak Power for ns Pulse | kW | 60 |
| Pulse Energy | mJ | 1.5 |
| Cable Tensile Load | N | 100 |
| Temperature Rise@250W，23℃ | ℃ | ≤15 |
| Operating Temperature | ℃ | 10 to 50 |
| Storage Temperature(non-condensing) | ℃ | -10 to +70 |

*For different pulse applications, pls discuss with Optizone Technology.

*The dimensions of beam expanders are dependent on the required beam diameter,detailed informations pls contact Optizone or see the shipment data sheet.

*The material must be RoHS compliant.

## Package Dimensions

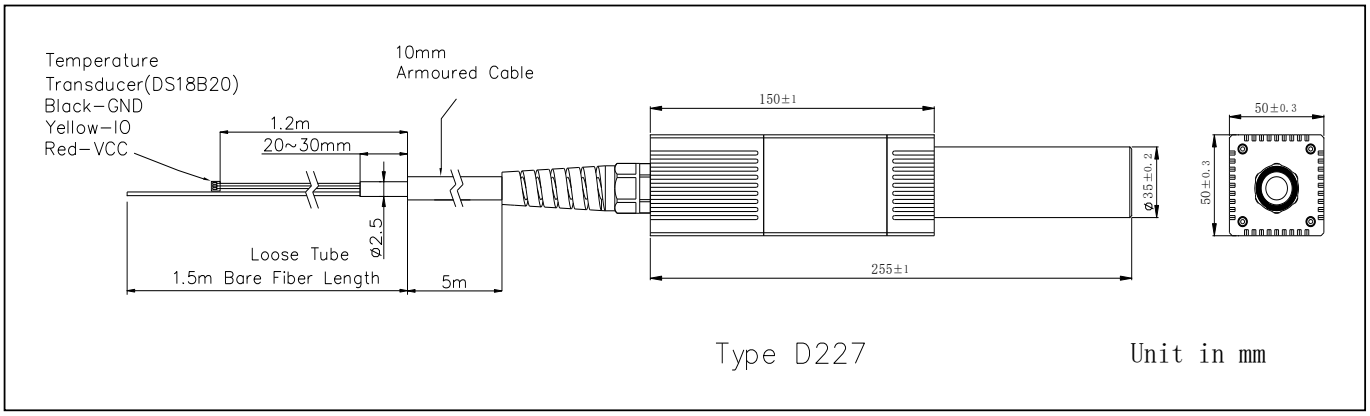


## Ordering Information

**HPICI**-①①①①-②②②-③③③-④④-⑤-⑥-⑦

①①①①: Wavelength
0666 - 1064/660nm
SS - Specify

②②②: Package Type
D227 - Type D227

③③③: Handling Power
250 - 250W
SS - Specify

④④: Output Beam Diameter
73 - 7.3mm
SS - Specify

⑤: Fiber Jacket
10 - 10mm Armoured Cable
S - Specify

⑥: Fiber Length
6.5 - 5.0m 10mm Armoured Cable & 20~30mm 2.5mm Loose Tube &1.2m Temperature Sensing 1.5m Bare Fiber

⑦: Fiber Type
126 - CJGDF-30/250-062
120 - CJGDF-25/250,NA0.065
SS - Specify

# High Power Polarization Insensitive Collimated Beam Isolator 10xxnm 350W

Spec Review No.: SR2406045A Date: Jun . 28 , 2024

## Specifications

| Parameters | Unit | Values |
|---|---|---|
| Center Wavelength (λc) | nm | 1064 |
| Operating Wavelength Range | nm | ±10 |
| Min. Isolation | dB | 30 |
| Min. Transmission @ 1064nm | - | 95% |
| Min. Transmission @ 635nm | - | 20% |
| Min. Return Loss | dB | 50 |
| Nominal Output Beam Diameter (1/e^2)@0~1m WD | mm | 7.0±0.5 |
| Ellipticity From Output Surface | - | >92% |
| Nominal $M^2$ Degradation | - | <10% |
| Max. Optical Average Power @ 1064nm | W | 350 |
| Output Beam Degradation@50W/350W | % | ≤10 |
| Nominal Focal Shift of Thermal Lens @ f=300 Lens | mm | ≤3.0 |
| Peak Power for ns Pulse | kW | 100 |
| Pulse Energy | mJ | 2.0 |
| Cable Tensile Load | N | 50 |
| Temperature Rise@350W，23℃ | ℃ | ≤15 |
| Operating Temperature | ℃ | 10 to 50 |
| Storage Temperature(non-condensing) | ℃ | -10 to +70 |

*For different pulse applications, pls discuss with Optizone Technology.

*The dimensions of beam expanders are dependent on the required beam diameter,detailed informations pls contact Optizone or see the shipment data sheet.

*The material must be RoHS compliant.

## Package Dimensions

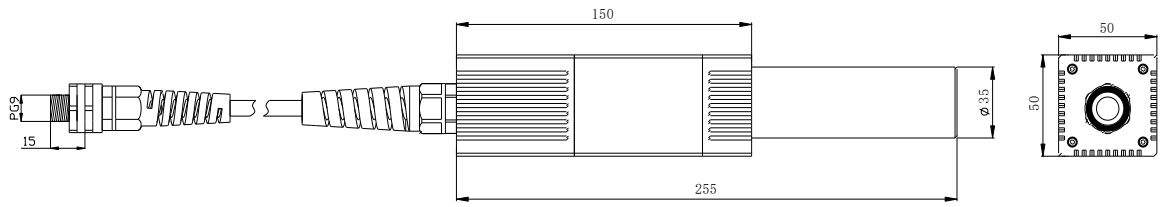


Type D227 Unitin:mm

## Ordering Information

**HPICI**-①①①①-②②②-③③③-④④-⑤-⑥-⑦

①①①①: Wavelength
0663- 1064/635nm
SS - Specify

②②②: Package Type
D227 - Type D227

③③③: Handling Power
350 - 350W
SS - Specify

④④: Output Beam Diameter
70 - 7.0mm
SS - Specify

⑤: Fiber Jacket
8 - 8mm Armoured Cable
10 - 10mm Armoured Cable
S - Specify

⑥: Fiber Length
5 - 3.5m 8mm Armoured Cable & 1.8mm Loose Tube
1.5m Bare Fiber

⑦: Fiber Type
107 - YOFC GDF_DC 30/250-0.065
S - Specify

# High Power Free Space Isolator 4xxnm 500mW Clear Aperture 2.5mm

Spec Evaluation No.: SR2308074A Date: Aug. 17, 2023

## Specifications

| Parameters | Unit | Values |
|---|---|---|
| Center Wavelength (λc) | nm | 405 or Specify |
| Operating Wavelength Range | nm | ±2 |
| Typ. Peak Isolation | dB | 30~35 |
| Min. Isolation at 23℃ | dB | 28 |
| Typ. Insertion Loss | dB | 0.8 |
| Max. Insertion Loss | dB | 0.95 |
| Min. Extinction Ratio at λc,23℃ | dB | 25 |
| Clear Aperture | mm | 2.5 |
| Max. Optical Power (CW, measured @ BD 0.5mm) | W | 0.5 or Specify |
| Operating Temperature | ℃ | 10 to +40 |
| Storage Temperature | ℃ | -20 to +70 |

*Input polarization plane - vertical.

*The material must be RoHS compliant.

## Package Dimensions

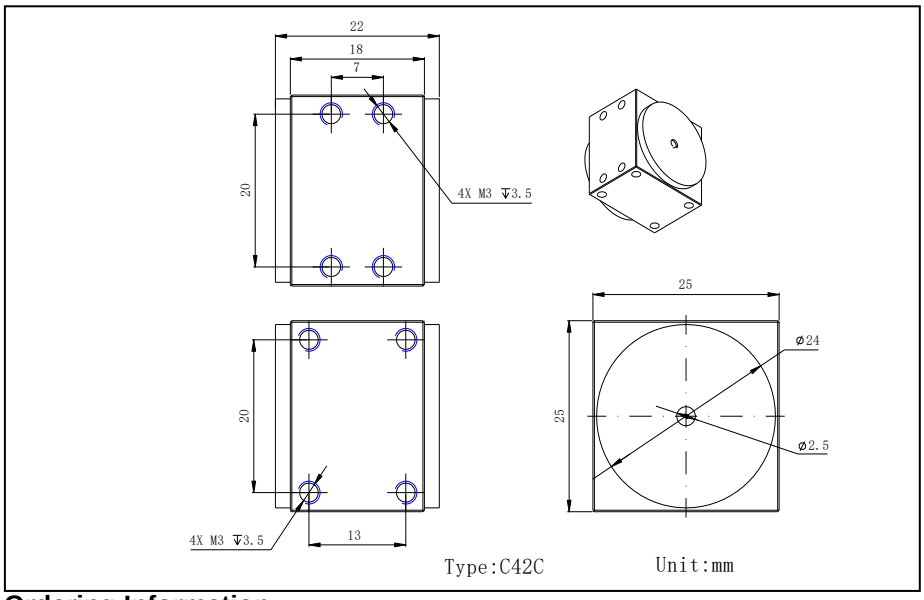


## Ordering Information

**HPFSI**-①①①-②②②-③③-④④-⑤

①①: Wavelength
405 - 405nm
S - Specify

②②②: Package Type
C42C - Type C42C

③③: Handling Power
0.5 - 0.5W
S - Specify

④④: Clear Aperture
25 - Dia. 2.5mm
SS - Specify

⑤: Polarization type
S - Polarization Sensitive

Form No.: D05-230-05 Rev.B

# High Power Free Space Isolator 7xxnm 100mW Clear Aperture 2mm

Spec Review No.: SR2407040A Date:Jul.18,2024

## Specifications

| Parameters | Unit | Values |
|---|---|---|
| Center Wavelength (λc) | nm | 780 or specify |
| Operating Wavelength Range | nm | ±5 |
| Typ. Peak Isolation | dB | 30~35 |
| Min. Isolation at 23℃ | dB | 25 |
| Max. Insertion Loss at 23℃ | dB | 0.5 |
| Min. Extinction Ratio | dB | 20 |
| Max. Optical Power (CW, measured @ BD 0.5mm) | W | 0.1 or specify |
| Operating Temperature | ℃ | -5 to +50 |
| Storage Temperature | ℃ | -20 to +70 |

*For pulse applications, pls discuss with Optizone Technology.

*The material must be RoHS compliant.

## Package Dimensions

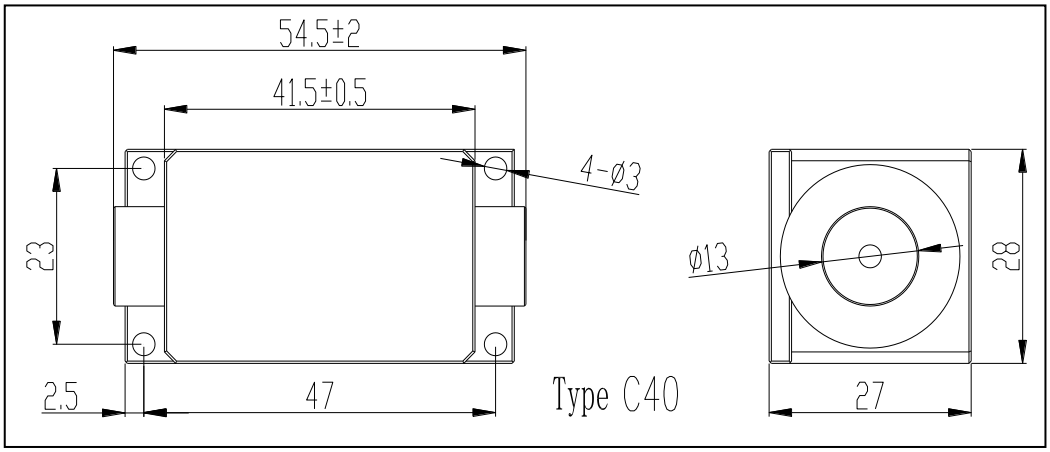


## Ordering Information

**HPFSI**-①①-②②②-③③③-④④-⑤-⑥⑥-⑦-⑧

①①: Wavelength
78 - 780nm
S - Specify

②②②: Package Type
C40 - Type C40
S - Specify

③③③: Handling Power
0.1 - 0.1W
S - Specify

④④: Clear Aperture
20 - Dia. 2.0mm
S - Specify

⑤: Polarization type
S - Polarization Sensitive

⑥⑥: Wavelength Range
5 - λ±5nm
S - Specify

⑦: Input Polarization
H - Horizontal
V - Verical
45-45°
S - Specify

⑧: Output Polarization
H - Horizontal
V - Verical
45-45°
S - Specify

# High Power Free Space Isolator 10xxnm 10W Clear Aperture 3mm

Spec Review No.:SR240712A

Date: Jul. 05, 2024

## Specifications

| Parameters | Unit | Values |
|---|---|---|
| Center Wavelength (λc) | nm | 1064 or Specify |
| Operating Wavelength Range | nm | ±5 or Specify |
| Peak Isolation at 23℃ | dB | 30 |
| Max. Insertion Loss at 23℃ | dB | 0.3 |
| Min. Extinction Ratio at 23℃ | dB | 25 |
| Max. Optical Power (measured @ BD 1.0mm) | W | 10 or Specify |
| Damage Threshold at 10ns | $J/cm^2$ | 10 |
| Operating Temperature | ℃ | 10 to +50 |
| Storage Temperature (Non-Condensing) | ℃ | 0 to +75 |

*The material must be RoHS compliant.

## Package Dimensions

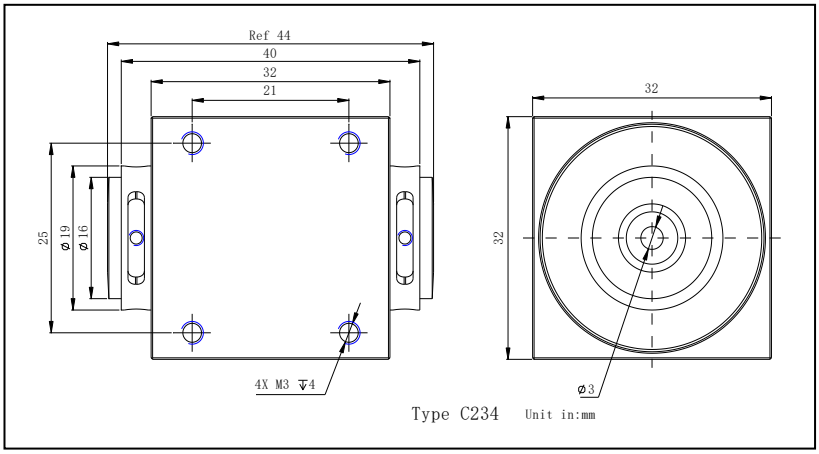


## Ordering Information

**HPFSI**-①①-②②②-③③-④④-⑤-⑥-⑦-⑧

①①: Wavelength
06 - 1064nm
S - Specify

②②②: Package Type
C234 - Type C234

③③: Handling Power
10 - 10W
S - Specify

④④: Clear Aperture
30 - Dia. 3mm

⑤: Polarization type
S - Polarization Sensitive

⑥: Wavelength Range
5 - λ±5nm
S - Specify

⑦: Input Polarization
H - Horizontal
V - Verical
45 - 45°
S - Specify

⑧: Output Polarization
H - Horizontal
V - Verical
45 - 45°
S - Specify

# High Power Free Space Isolator 10xxnm 300W Clear Aperture 5mm

Spec Review No.: SR2207036A

Date: Jul. 20, 2022

**Specifications**

| Parameters | Unit | Values |
|---|---|---|
| Center Wavelength (λc) | nm | 1030 |
| Operating Wavelength Range | nm | ±10 |
| Typ. Peak Isolation at 23℃ | dB | 30~35 |
| Min. Isolation at 23℃ | dB | 28 |
| Max. Insertion Loss at 23℃ | dB | 0.4 |
| Min. Extinction Ratio at 23℃ | dB | 25 |
| Max. Optical Power (measured @ BD 2.5mm) | W | 100,200,300 or Specify |
| Damage Threshold at 10ns | $J/cm^2$ | 10 |
| Operating Temperature | ℃ | 10 to +50 |
| Storage Temperature (Non-Condensing) | ℃ | 0 to +75 |

*Input polarization plane - vertical

*The material must be RoHS compliant.

**Package Dimensions**

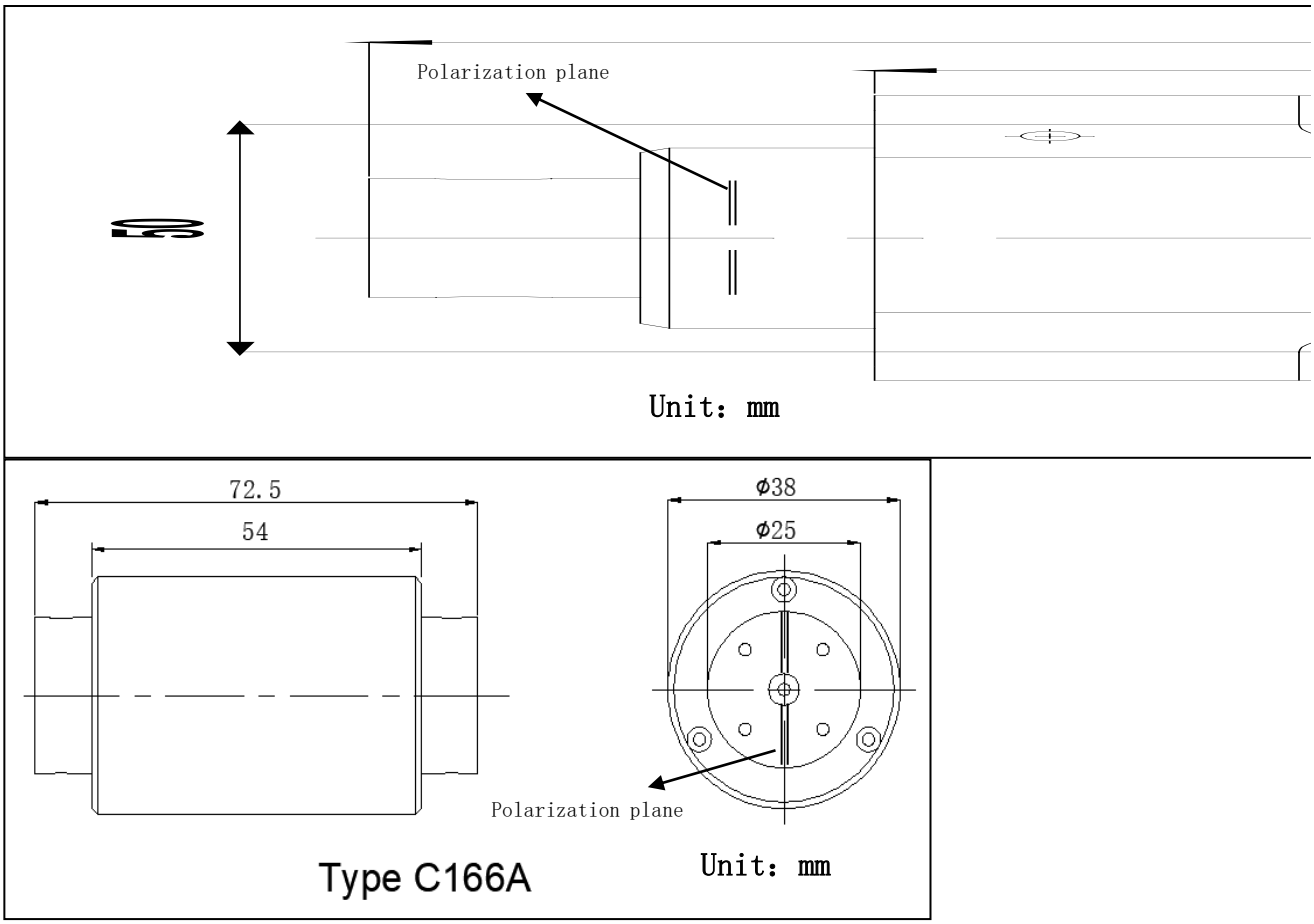

## Ordering Information

**HPFSI**-①①-②②②②-③③-④④-⑤-⑥⑥-⑦-⑧

①①: Wavelength
03 - 1030nm
SS - Specify

②②②②: Package Type
C166 - Type C166
C166A - Type C166A

③③: Handling Power
100 - 100W
200 - 200W
300 - 300W
SS - Specify

④④: Clear Aperture
50 - Dia. 5.0mm
SS - Specify

⑤: Polarization type
S - Polarization Sensitive

⑥⑥: Wavelength Range
10 - λ±10nm

⑦: Input Polarization
H - Horizontal
V - Verical
S - Specify

⑧: Output Polarization
H - Horizontal
V - Verical
S - Specify

# High Power Free Space Isolator 10xxnm 500W Clear Aperture 5mm

Spec Review No.: SR2304040A

Date: Apr. 18, 2023

## Specifications

| Parameters | Unit | Values |
|---|---|---|
| Center Wavelength (λc) | nm | 1064 |
| Operating Wavelength Range | nm | ±10 |
| Typ. Peak Isolation at 23℃ | dB | 30~35 |
| Min. Isolation at 23℃ | dB | 28 |
| Max. Insertion Loss at 23℃ | dB | 0.2 |
| Max.Clear Aperture | mm | 5 |
| Min. Extintion Ratio | dB | 25 |
| Max. Optical Power (Measured @BD 2.5mm) | W | 200,500 or Specify |
| Damage Threshold at 10ps | $J/cm^2$ | 10 |
| Operating Temperature (Non-Condensing) | ℃ | 10 to +50 |
| Storage Temperature (Non-Condensing) | ℃ | 0 to +75 |

* The product has dustproof window ,for special requirements please contact Optizone.

* The material must be RoHS compliant.

## Package Dimensions

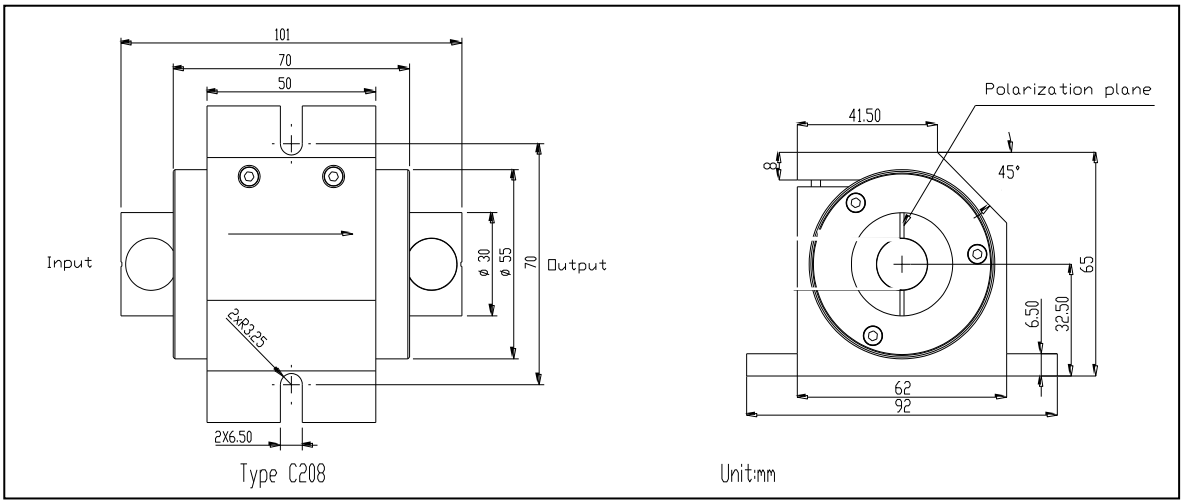


## Ordering Information

**HPFSI**-①①-②②②②-③③③-④④④-⑤-⑥⑥-⑦-⑧

①①: Wavelength
06 - 1064nm
SS - Specify

②②②②: Package Type
C208 - Type C208

③③③: Handling Power
200 - 200W
500 - 500W
SSS - Specify

④④④: Clear Aperture
50 - Dia. 5.0mm
SSS - Specify

⑤: Polarization type
S - Polarization Sensitive

⑥⑥: Wavelength Range
10 - λ±10nm

⑦: Input Polarization
H - Horizontal
V - Verical
S - Specify

⑧: Output Polarization
H - Horizontal
V - Verical
S - Specify

# Free Space Isolator 15xxnm 500mW

Spec No.: CAT-07-001G Date:

**Specifications**

| Parameter | Unit | Values | |
|---|---|---|---|
| Stage | | Single Stage | Dual Stage |
| Center Wavelength (λc) | nm | 1310 or 1550 | |
| Operating Wavelength Range | nm | ±20 | |
| Typ. Peak Isolation | dB | 42 | 55 |
| Min. Isolation at 23℃, λc | dB | 35 | 46 |
| Typ. Insertion Loss at 23℃, Proper SOP | dB | 0.2 | 0.3 |
| Max. Insertion Loss at 23℃, Proper SOP | dB | 0.3 | 0.4 |
| Min. Extinction Ratio | dB | 25 | |
| Min. PDL | dB | 25 | |
| Clear Aperture | mm | 0.9 | |
| Polarization Plane of Input | | Refer to Drawing Below | |
| Tilt Angle of Input Polarization | deg | 0 | |
| Max. Optical Power (CW), Proper SOP | mW | 500 @BD500um（Proper Alignment Is Necessary) | |
| Operating Temperature | ℃ | -5 to +70 | |
| Storage Temperature | ℃ | -40 to +85 | |

*The material must be RoHS compliant.

**Package Dimensions**

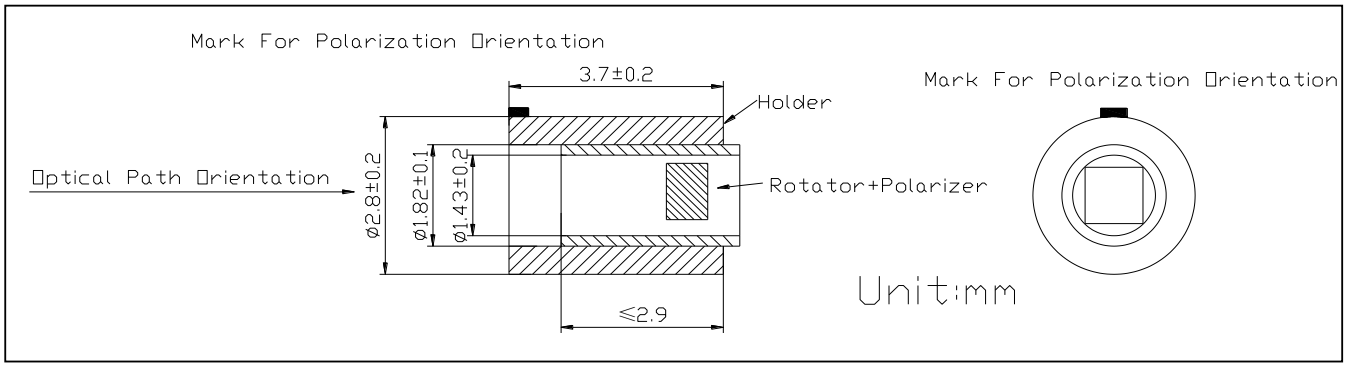


**Ordering Information**

**FSI**-①-②-③-④

①: Wavelength

1310 - 1310nm

1550 - 1550nm

S - Specify

②: Stage

S - Single Stage

D - Dual Stage

③: Optical Path Orientation

F - Forward (as indicated above)

B - Backward

④: Package Dimensions

47 - Ø2.8×3.7

S - Specify

# Free Space Isolator 19xx~20xxnm 500mW

Spec No.: CAT-10-017C Date:

**Specifications**

| Parameter | Unit | Values | |
|---|---|---|---|
| Stage | | Single Stage | Dual Stage |
| Center Wavelength | nm | 2000 | |
| Operating Wavelength Range | nm | ±50 | |
| Typ. Peak Isolation | dB | 38 | 50 |
| Min. Isolation at 23℃ | dB | 18 | 32 |
| Typ. Insertion Loss at 23℃ | dB | 0.2 | 0.3 |
| Max. Insertion Loss at 23℃ | dB | 0.4 | 0.5 |
| Clear Aperture | mm | 0.9 | |
| Polarization Plane of Input | | Illustrated in Below Drawing | |
| Tilt Angle of Input Light | deg | 0 | |
| Max. Optical Power (CW) | mW | 500（Polarized Light & Proper Alignment Is Necessary) | |
| Operating Temperature | ℃ | -5 to +70 | |
| Storage Temperature | ℃ | -40 to +85 | |

*The material must be RoHS compliant.

**Package Dimensions**

**Single Stage**

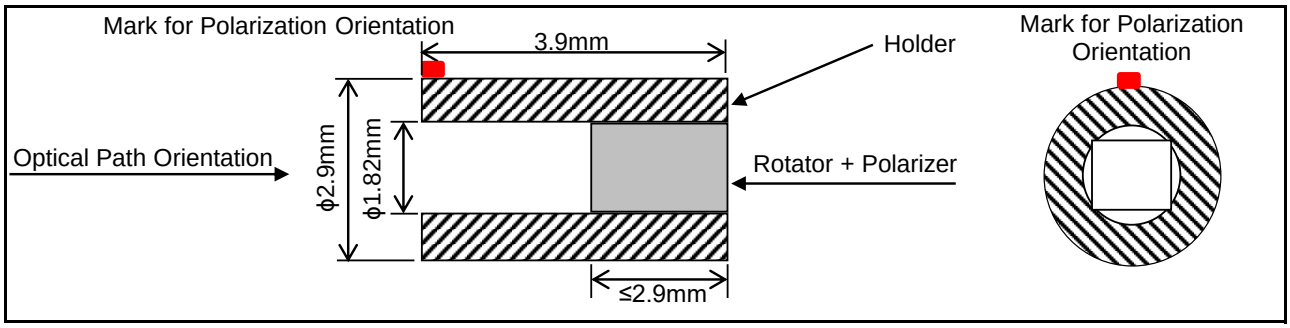


**Dual Stage**

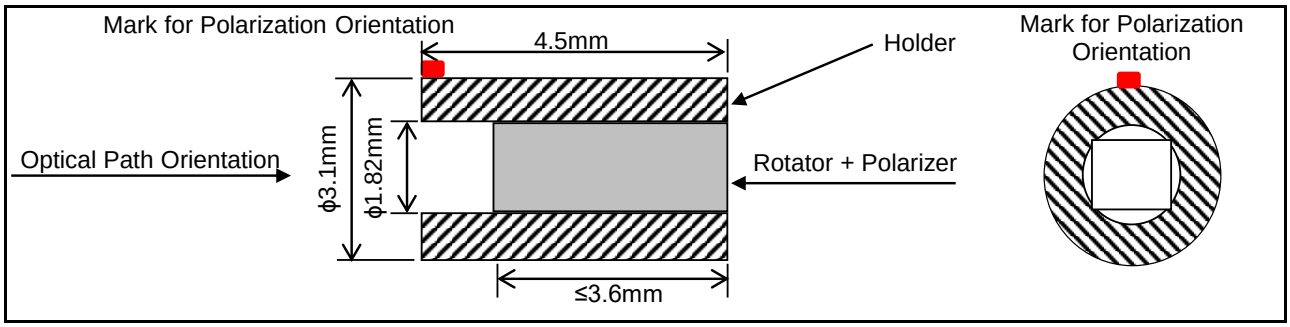


**Ordering Information**

**FSI**-①-②-③-④

①: Wavelength
2000 - 2000nm
S - Specify

②: Stage
S - Single Stage
D - Dual Stage

③: Optical Path Orientation
F - Forward (as indicated above)
B - Backward

④: Package Size
110 - Ø2.9×3.9
168 - Ø3.1×4.5
S - Specify

# High Power Faraday Rotator 10xxnm 10W 3mm

Spec Review No.:SR2401034A

Date: Jan. 18, 2024

## Specifications

| Parameters | Unit | Values |
|---|---|---|
| Center Wavelength (λc) | nm | 1064 or Specify |
| Operating Wavelength Range | nm | ±5 or Specify |
| Nominal Rotation Angle ( λc ) | deg | 45 for Single Pass,90 for Dual Pass |
| Rotation Angle Tolerance at 23℃, λc | deg | +/-2.0 |
| Typ. Insertion Loss at 23℃, λc | dB | 0.1 |
| Max. Insertion Loss | dB | 0.15 |
| Min. Extintion Ratio | dB | 28 |
| Max. Optical Power (measured @ BD 1.0mm) | W | 10 or Specify |
| Damage Threshold at 10ns | $J/cm^2$ | 10 |
| Operating Temperature | ℃ | 10 to +50 |
| Storage Temperature (Non-Condensing) | ℃ | 0 to +75 |

*The direction of polarization rotates to the right

*The material must be RoHS compliant.

## Package Dimensions

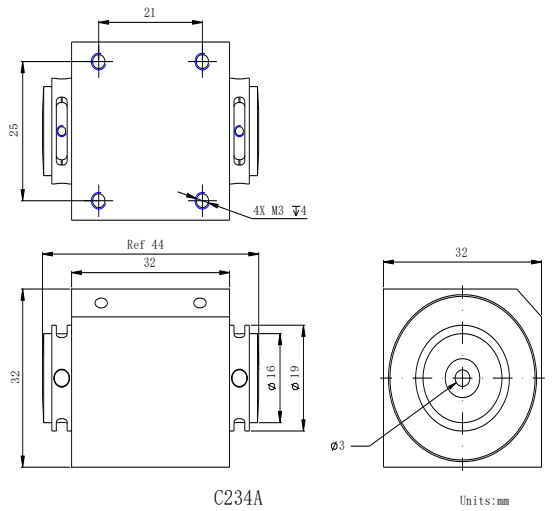


## Ordering Information

**HPFR**-①①-②②②-③③-④④-⑤-⑥-⑦-⑧

①①: Wavelength
06 - 1064nm
S - Specify

②②②: Package Type
C234A - Type C234A

③③: Handling Power
10 - 10W
S - Specify

④④: Clear Aperture
30 - Dia. 3mm

⑤: Polarization type
S - Polarization Sensitive

⑥: Wavelength Range
5 - λ±5nm
S - Specify

⑦: Input Polarization
H - Horizontal
V - Verical
45 - 45°
S - Specify

⑧: Output Polarization
H - Horizontal
V - Verical
45 - 45°
S - Specify

# High Power Faraday Rotator 10xxnm 150W Clear Aperture 5mm

Spec Review No.: SR2201014A

Date: Jan. 14, 2022

## Specifications

| Parameters | Unit | Values |
|---|---|---|
| Operating Wavelength Range | nm | 1030±5 |
| Rotation Angle,CWL | deg | 45±2 |
| Typ. Insertion Loss at 23℃, λc | dB | 0.1 |
| Max. Insertion Loss | dB | 0.15 |
| Min. Extintion Ratio | dB | 33 |
| Max. Optical Power (Measured @ BD 1.5mm) | W | 150 |
| Pulse Conditions | - | 1J/cm²@8ps;10J/cm²@10ns |
| Operating Temperature (Non-Condensing) | ℃ | -5 to +50 |
| Storage Temperature (Non-Condensing) | ℃ | -20 to +75 |

* The product has dustproof window ,for special requirements please contact Optizone.

* The material must be RoHS compliant.

## Package Dimensions

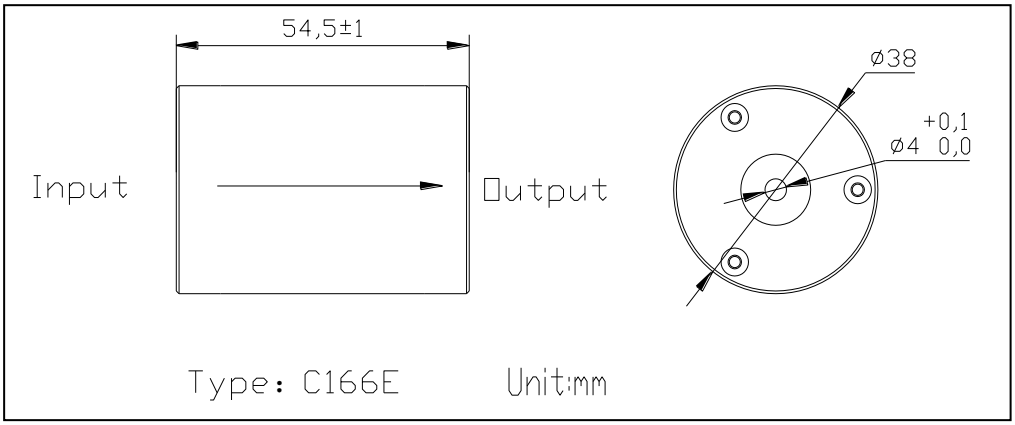


## Ordering Information

**HPFR**-①①-②②-③③-④④-⑤

①①: Wavelength
03 - 1030nm
SS - Specify

③③: Handling Power
150 - 150W
SS - Specify

⑤: Structure Type
45 - 45 deg

②②: Package Type
C166E - Type C166E

④④: Clear Aperture
40 - Dia. 4.0mm
SS - Specify

# High Power Faraday Rotator 10xxnm 500W Clear Aperture 10mm

Spec Review No.: SR2404056A Date: Apr. 28, 2024

## Specifications

| Parameters | Unit | Values |
|---|---|---|
| Center Wavelength (λc) | nm | 1030 |
| Operating Wavelength Range | nm | ±5 |
| Nominal Rotation Angle ( λc ) | dB | 45 for Single Pass,90 for Dual Pass |
| Rotation Angle Tolerance at 23℃, λc | dB | +/-2.0 |
| Typ. Insertion Loss at 23℃, λc | dB | 0.1 |
| Max. Insertion Loss | mm | 0.15 |
| Min. Extintion Ratio | dB | 30 |
| Max. Average Power (Measured @ BD 4.5mm) | W | 150 or Specify |
| Pulse Conditions | $J/cm^2$ | 1J/cm²@8ps;10J/cm²@10ns |
| Operating Temperature | ℃ | -5 to +50 |
| Storage Temperature | ℃ | -20 to +75 |

* The direction of polarization rotates to the right

* The material must be RoHS compliant.

## Package Dimensions

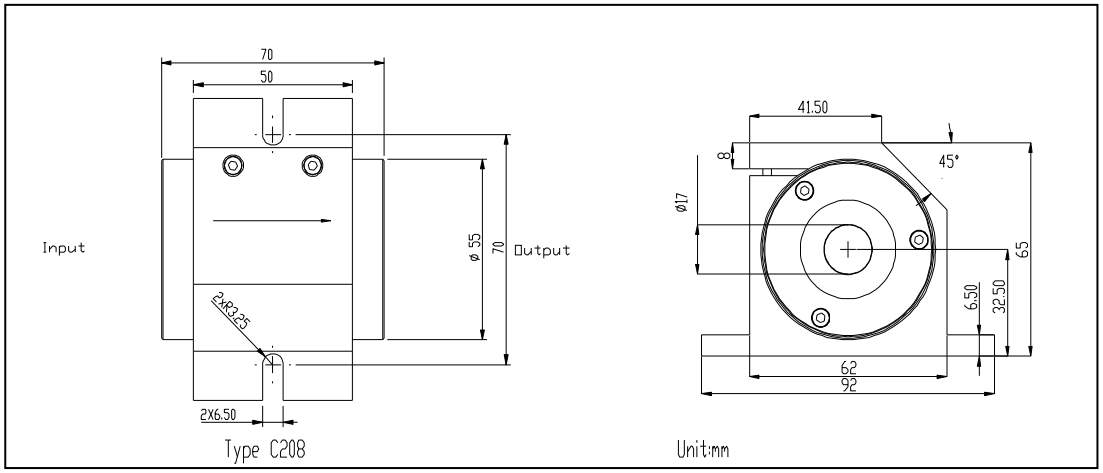


## Ordering Information

**HPFR**-①①-②②-③③-④④-⑤

①①: Wavelength
03 - 1030nm
S - Specify

③③: Handling Power
10 - 10W
S - Specify

⑤: Polarization type
N - Narrow
B - Broad band

②②: Package Type
C208A - Type C208A

④④: Clear Aperture
80 - Dia. 8.0mm
S - Specify

# Air-cooled Fiber Endcap 4xx~15xxnm 100~500W

Spec Review No.: SR1811035C Date: Jul. 11, 2019

## Specifications

| Parameters | Unit | Values | |
|---|---|---|---|
| Center Wavelength | nm | 1064, 1080 or Specify | |
| Operating Wavelength Range | nm | ±20 | |
| Typ. Transmission Ratio | - | 99% | |
| Min. Transmission Ratio | - | 98% | |
| Max. Handling Power (CW) | W | 200, 300, 400, 500 or Specify | |
| Loss Power Handling Capability | - | Max. 100W for 10s<br>Max. 50W for 1 min<br>Max. 10W Continuously | With external cooler.<br>Max. 150W for 10s<br>Max. 100W for 1min<br>Max. 50W Continuously |
| Max. Peak Power | KW | 10 | |
| Nominal Beam Pointing Accuracy | deg | ≤1 | |
| Min. Beam Ellipticity | - | 0.92 | |
| Max. Tensile Load | N | 5 | |
| Outer Package Material | - | Stainless Steel / Aluminum / Copper | |
| Operating Temperature | ℃ | 10 to +50 | |
| Storage Temperature | ℃ | -40 to +85 | |

*The material must be RoHS&REACH compliant.

## Package Dimensions

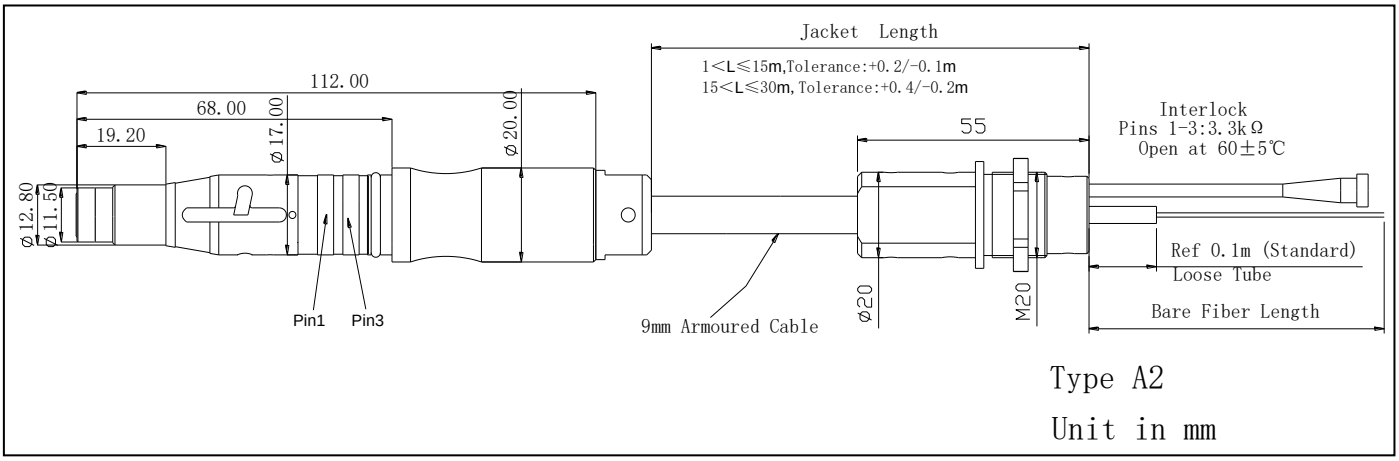


*The actual dimensions may be different from above drawing due to different requirements, please see shipment data sheet.

## Ordering Information

**AFE**-①①-②②-③-④④-⑤⑤-⑥⑥-⑦⑦-⑧⑧

①①: Wavelength
06 - 1064nm
08 - 1080nm
SS - Specify

②②: Connector Type
QB - QBH Compatible
SS - Specify

③: Handling Power
200 - 200W
300 - 300W
400 - 400W
500 - 500W
S - Specify

④④: Fiber Type
01 - Nufern LMA GDF-20/400-M NA0.065
11 - Coractive DCF-UN 50/400 NA0.12
33 - Liekki Passive-14/250DC,NA0.07
03 - Nufern BD-S100/120/360 NA0.22
SS - Specify

⑤⑤: Jacket Length
06 - 6m 9mm Armoured Cable
SS - Specify

⑥⑥: Bare Fiber Length
01 - 1 m
1.5 - 1.5m
SS - Specify

⑦⑦: Package Type
A2 - φ20
SS - Specify

⑧⑧: Protection Cap Type
01 - Aluminum Without Window
02 - Aluminum With Window For SM Fiber
03 - Aluminum With Window For MM Fiber
SS - Specify

# Air-cooled Fiber Endcap 19xx~20xxnm 500W

Spec Review No.: SR2310010A Date: Oct. 8, 2023

## Specifications

| Parameters | Unit | Values | |
|---|---|---|---|
| Center Wavelength | nm | 1940 or Specify | |
| Operating Wavelength Range | nm | ±20 | |
| Typ. Transmission Ratio(Inner Core) | - | 99% | |
| Min. Transmission Ratio(Inner Core) | - | 98% | |
| Max. Handling Power (CW) | W | 200, 300, 400, 500 or Specify | |
| Loss Power Handling Capability | - | Max. 100W for 10s<br>Max. 50W for 1 min<br>Max. 10W Continuously | With external cooler.<br>Max. 150W for 10s<br>Max. 100W for 1min<br>Max. 50W Continuously |
| Max. Peak Power | KW | 10 | |
| Nominal Beam Pointing Accuracy | deg | ≤1 | |
| Min. Beam Ellipticity | - | 0.92 | |
| Window Surface Quality ( Scratch / Dig) | - | 10/5 | |
| Max. Tensile Load | N | 5 | |
| Outer Package Material | - | Stainless Steel / Aluminum / Copper | |
| Operating Temperature | ℃ | 10 to +50 | |
| Storage Temperature | ℃ | -30 to +75 | |
| Fiber Length ≤15 m | – | The Fiber Length Tolerance is -10cm | |
| 15m＜Fiber Length ≤30m | – | The Fiber Length Tolerance is -20cm | |

* The actual dimensions may be different from above drawing due to different requirements, please see shipment data sheet.

* The material must be RoHS compliant.

## Package Dimensions

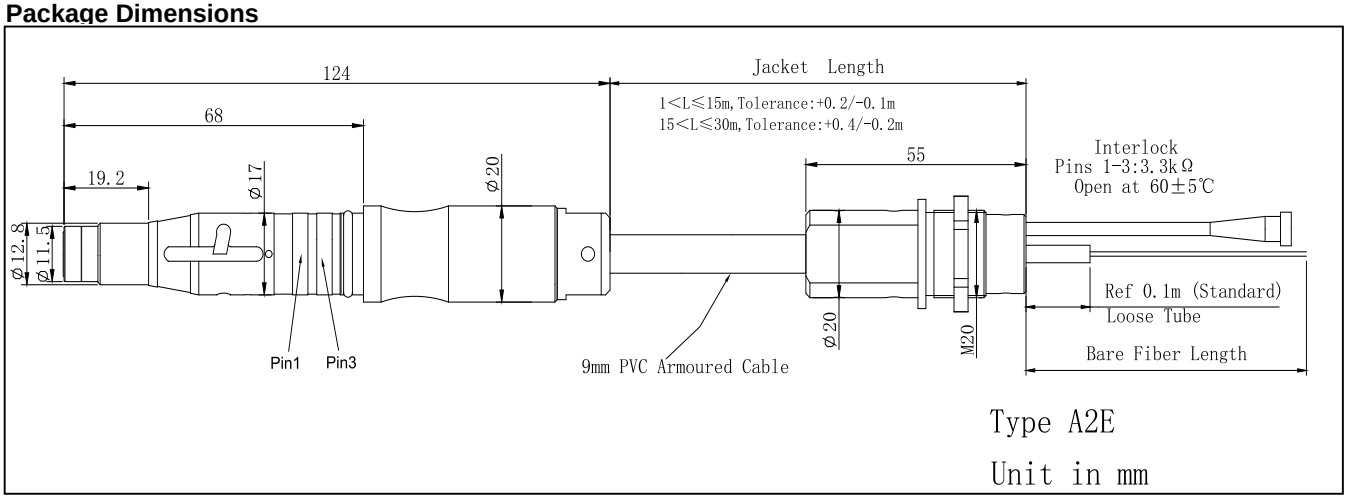


## Ordering Information

**AFE**-①①-②②-③-④④-⑤⑤-⑥⑥-⑦⑦-⑧⑧--⑨

①①: Wavelength
19 - 1940nm
SS - Specify

②②: Connector Type
QB - QBH Compatible
SS - Specify

③: Handling Power
200 - 200W
300 - 300W
400 - 400W
500 - 500W
S - Specify

④④: Fiber Type
38 - Nufern BD-G25/400-11FA
SS - Specify

⑤⑤: Jacket Length
1.5 - 1.5m φ9mm PVC Armoured Cable
SS - Specify

⑥⑥: Bare Fiber Length
1.5 - 1.5m
02 - 2m
SS - Specify

⑦⑦: Package Type
A2E - Type A2E
SS - Specify

⑧⑧: Protection Cap Type
01 - Aluminum Without Window
02 - Aluminum With Window For SM Fiber
03 - Aluminum With Window For MM Fiber
SS - Specify

⑨:Cladding Power Stripping
Y - Yes

# Fiber Optical Cable(Indirect Water Cooling) 4xxnm 500W

Spec Review No.:SR2105026A Date: May 26, 2021

**Specifications**

| Parameters | Unit | Values |
|---|---|---|
| Operating Wavelength | nm | 440～460（Nominal Center Wavelength 450nm） |
| Min. Transmission Ratio (Inner Core By Design) | - | 98% |
| Min. Transmission Ratio @635nm (By Design) | | 80% (Inner Core Without Window) |
| Max. Handling Power (CW) | W | 300 or Specify |
| Pulse Power | - | Max. 10KW @10ms<br>Max. 50KW @1ms<br>Max. 1MW @50ns |
| Loss Power Handling Capability (Flow of Water>1L/min) | - | 500W for 10 S |
| Cladding Light Stripping Efficiency (By Design) | - | >95.00% |
| Nominal Beam Pointing Accuracy | mrad | ≤20 |
| Min. Beam Ellipticity | - | 0.92 |
| End Cap Surface Quality ( Scratch / Dig) | - | 10/5, Center Diameter 1.6mm Area 0/0 |
| Max. Fiber Tensile Load | N | 5 |
| Package Material | - | Stainless Steel / Aluminum / Copper |
| Outer Diameter Of Cable | mm | Φ13±0.2 |
| Operating Temperature | ℃ | +10 to +50 |
| Storage Temperature | ℃ | -10 to +75 |
| Max. Water Pressure | Bar | 8 |
| Flow of Water | L/min | 1.5-3 |
| Fiber Length ≤15 m | - | The Fiber Length Tolerance is -10cm |
| 15m＜Fiber Length ≤30m | - | The Fiber Length Tolerance is -20cm |
| Jacket Length≤15m | - | The Jacket Length Tolerance is +0.2/-0.1m |
| 15m＜Jacket Length ≤30m | - | The Jacket Length Tolerance is +0.4/-0.2m |

*The actual dimensions may be different from above drawing due to different requirements,please see shipment data sheet.

*The material must be RoHS compliant.

**Package Dimensions**

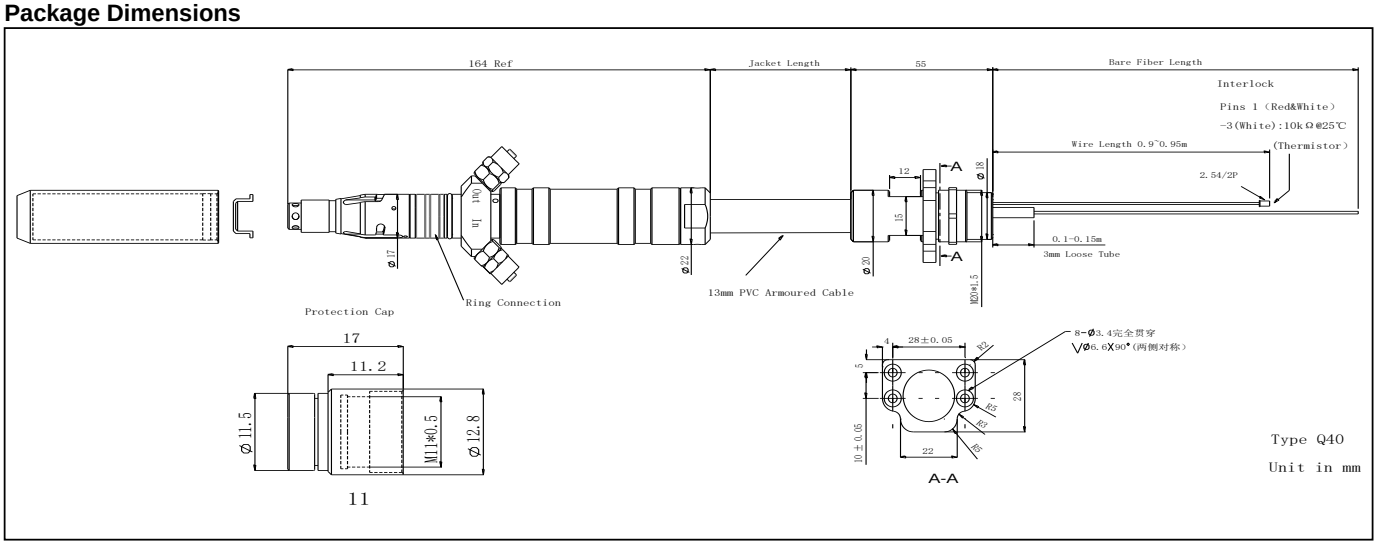


**Ordering Information**

**FOC**-①①-②②-③-④④-⑤⑤-⑥⑥-⑦-⑧⑧-⑨⑨

①①: Wavelength
45 - 450nm
SS - Specify

②②: Connector Type
QB - QBH Compatible

③: Handling Power
300 - 300W
S - Specify

④④: Fiber Type
57 - SFS200/220/320/480Z-NA0.22(Fiberguide)
SS - Specify

⑤⑤: Jacket Length
05 - 5m Armoured Cable
10 - 10m Armoured Cable
15 - 15m Armoured Cable
SS - Specify

⑥⑥: Bare Fiber Length With Loose Tube
01 - 1.0 m
SS - Specify

⑦: Package Type
Q40 - Type Q40

⑧⑧: Protection Cap Type
11 - Stainless Steel With Window For MM Fiber(M11*0.5)
SS - Specify

⑨⑨: Water Pipe Length
05 - 5×2m
NN - None
SS - Specify

# Fiber Optical Cable 5xx~10xxnm 500~2000W

Spec Review No.: SR2204021A Date: Apr. 21, 2022

## Specifications

| Parameters | Unit | Values |
|---|---|---|
| Operating Wavelength | nm | 1050～1110（Nominal Center Wavelength 1080 nm） |
| Typ. Transmission Ratio (Inner Core) | - | 99% |
| Min. Transmission Ratio (Inner Core) | - | 98% |
| Max. Handling Power (CW) | W | 1000, 2000, 3000 or Specify |
| Pulse Power | - | Max. 10KW @10ms<br>Max. 50KW @1ms<br>Max. 1MW @50ns |
| Loss Power Handling Capability | - | 1KW for 10 min<br>500W Continuously |
| Nominal Beam Pointing Accuracy | deg | 1 |
| Min. Beam Ellipticity | - | 0.92 |
| Max. Fiber Tensile Load | N | 5 |
| Package Material | - | Stainless Steel / Aluminum / Copper |
| Operating Temperature | ℃ | +10 to +50 |
| Storage Temperature | ℃ | -10 to +75 |
| Max. Water Pressure | Bar | 8 |
| Flow of Water | L/min | 1.5-3 |
| Fiber Length ≤15 m | - | The Fiber Length Tolerance is -10cm |
| 15m＜Fiber Length ≤30m | - | The Fiber Length Tolerance is -20cm |
| Jacket Length≤15m | - | The Jacket Length Tolerance is +0.2/-0.1m |
| 15m＜Jacket Length ≤30m | - | The Jacket Length Tolerance is +0.4/-0.2m |

*The actual dimensions may be different from above drawing due to different requirements, please see shipment data sheet.

*For FOC without window, the transmission @635nm is around 80%(Inner Core).

*The material must be RoHS compliant.

## Package Dimensions

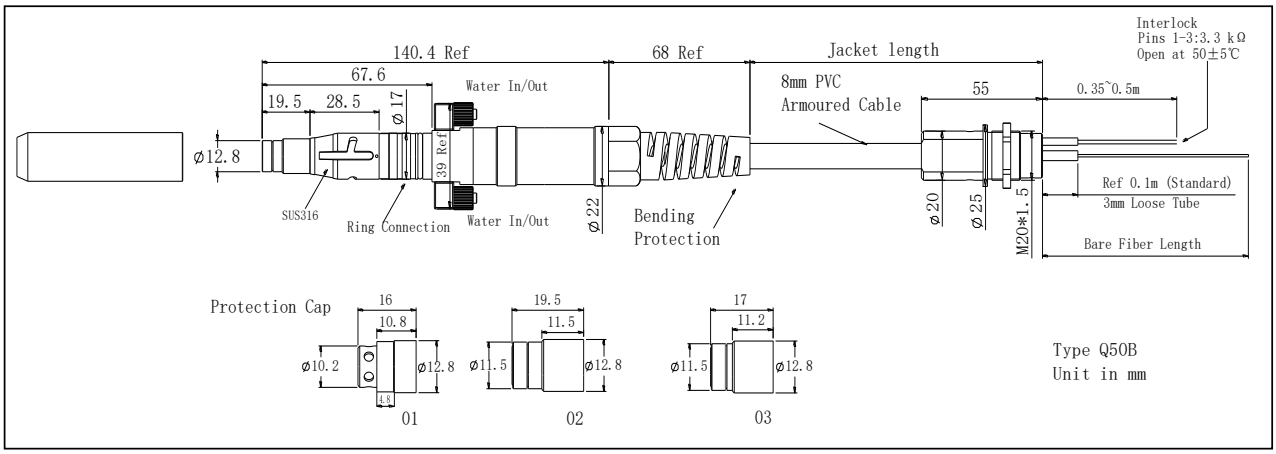


## Ordering Information

**FOC**-①①-②②-③-④④-⑤⑤-⑥⑥-⑦-⑧⑧-⑨⑨

①①: Wavelength
08 - 1080nm
SS - Specify

②②: Connector Type
QB - QBH Compatible

③: Handling Power
1000 - 1000W
2000 - 2000W
3000 - 3000W
S - Specify

④④: Fiber Type
01 - Nufern GDF-20/400-M NA0.065
88 - BrightCore 50/400 NA0.12
SS - Specify

⑤⑤: Jacket Length
10 - 10m 8mm PVC Armoured Cable
12 - 12m 8mm PVC Armoured Cable
SS - Specify

⑥⑥: Bare Fiber Length With Loose Tube
1.5 - 1.5m
02 - 2m
SS - Specify

⑦: Package Type
Q50B - Type Q50B

⑧⑧: Protection Cap Type
01 - Aluminum Without Window
02 - Aluminum With Window For SM Fiber
03 - Aluminum With Window For MM Fiber
SS - Specify

⑨⑨: Water Pipe Length
03 - 3×2m
NN - None
SS - Specify

# Fiber Optical Cable 10xxnm 4000W

Spec Review No.: SR2208019A Date: Aug. 5, 2022

## Specifications

| Parameters | Unit | Values |
|---|---|---|
| Operating Wavelength | nm | 900～1000（Nominal Center Wavelength 950nm）<br>1050～1110（Nominal Center Wavelength 1080 nm） |
| Typ. Transmission Ratio(Inner Core) | - | 99% |
| Min. Transmission Ratio (Inner Core) | - | 98% |
| Max. Handling Power (CW) | W | 1000, 2000, 4000, 6000， 8000 or Specify |
| Pulse Power | - | Max. 10KW @10ms<br>Max. 50KW @1ms<br>Max. 1MW @50ns |
| Loss Power Handling Capability | - | 1KW for 10 min<br>500W Continuously |
| Nominal Beam Pointing Accuracy | deg | 1 |
| Min. Beam Ellipticity | - | 0.92 |
| Max. Fiber Tensile Load | N | 5 |
| Package Material | - | Stainless Steel / Aluminum / Copper |
| Operating Temperature | ℃ | +10 to +50 |
| Storage Temperature | ℃ | -10 to +75 |
| Max. Water Pressure | Bar | 8 |
| Flow of Water | L/min | 1.5-3 |
| Fiber Length ≤15 m | - | The Fiber Length Tolerance is -10cm |
| 15m＜Fiber Length ≤30m | - | The Fiber Length Tolerance is -20cm |
| Jacket Length≤15m | - | The Jacket Length Tolerance is +0.2/-0.1m |
| 15m＜Jacket Length ≤30m | - | The Jacket Length Tolerance is +0.4/-0.2m |

*The actual dimensions may be different from above drawing due to different requirements,please see shipment data sheet.

*For FOC without window, the transmission @635nm is around 80%(Inner Core).

*The material must be RoHS compliant.

## Package Dimensions

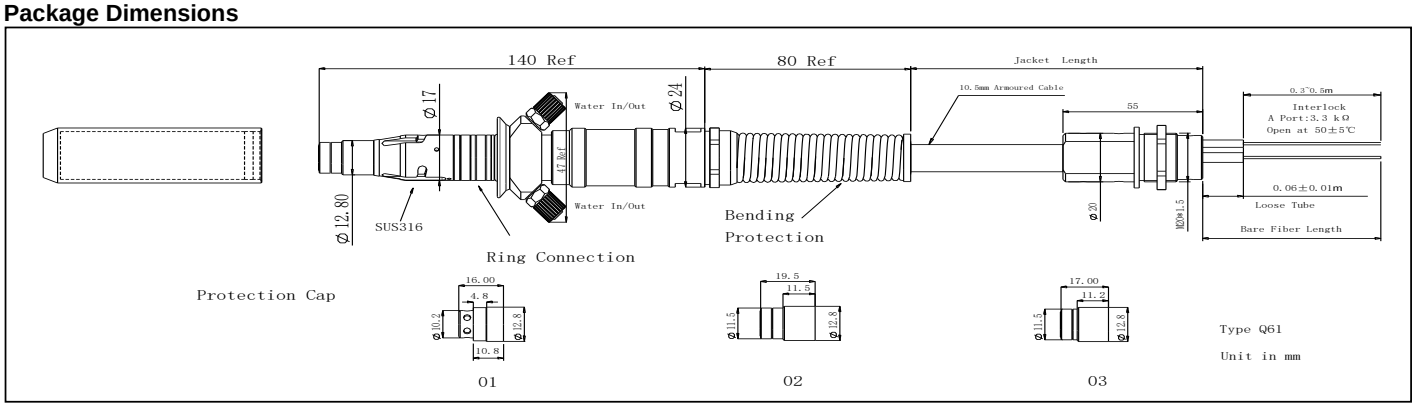


## Ordering Information

**FOC**-①①-②②-③-④④-⑤⑤-⑥⑥-⑦-⑧⑧-⑨⑨

①①: Wavelength
95 - 950nm
06 - 1064nm
08 - 1080nm
SS - Specify

②②: Connector Type
QB - QBH Compatible

③: Handling Power
1000 - 1000W
2000 - 2000W
4000 - 4000W
6000 - 6000W
S - Specify

④④: Fiber Type
78 - BrightCore 50/70/360 NA0.22
81 - BrightCore 100/120/360 NA0.22
SS - Specify

⑤⑤: Jacket Length
10 - 10m 10.5mm PVC Armoured Cable
15 - 15m 10.5mm PVC Armoured Cable
SS - Specify

⑥⑥: Bare Fiber Length With Loose Tube
1.5 - 1.5m
02 - 2m
SS - Specify

⑦: Package Type
Q61 - Type Q61

⑧⑧: Protection Cap Type
01 - Aluminum Without Window
02 - Aluminum With Window For SM Fiber
03 - Aluminum With Window For MM Fiber
SS - Specify

⑨⑨: Water Pipe Length
03 - 3m×2pcs
NN - None
SS - Specify

# Fiber Optical Cable(Indirect water cooling) 10xxnm 6000W

Spec Review No.: SR2011013B Date: Apr. 18, 2024

## Specifications

| Parameters | Unit | Values |
|---|---|---|
| Operating Wavelength | nm | 900～1000（Nominal Center Wavelength 950nm）<br>1050～1110（Nominal Center Wavelength 1080 nm） |
| Typ. Transmission Ratio (Inner Core) | - | 99% |
| Min. Transmission Ratio (Inner Core) | - | 98% |
| Max. Handling Power (CW) | W | 2000 or Specify |
| Pulse Power | - | Max. 10KW @10ms<br>Max. 50KW @1ms<br>Max. 1MW @50ns |
| Loss Power Handling Capability | - | 1KW for 10 min<br>500W Continuously |
| Nominal Beam Pointing Accuracy | deg | 1 |
| Min. Beam Ellipticity | - | 0.92 |
| Max. Fiber Tensile Load | N | 5 |
| Package Material | - | Stainless Steel / Aluminum / Copper |
| Operating Temperature | ℃ | +10 to +50 |
| Storage Temperature | ℃ | -10 to +75 |
| Max. Water Pressure | Bar | 8 |
| Flow of Water | L/min | 1.5-3 |
| Fiber Length ≤15 m | - | The Fiber Length Tolerance is -10cm |
| 15m＜Fiber Length ≤30m | - | The Fiber Length Tolerance is -20cm |
| Jacket Length≤15m | - | The Jacket Length Tolerance is +0.2/-0.1m |
| 15m＜Jacket Length ≤30m | - | The Jacket Length Tolerance is +0.4/-0.2m |

*The actual dimensions may be different from above drawing due to different requirements,please see shipment data sheet.

*For FOC without window,the transmission @635nm is around 80%.

*The material must be RoHS compliant.

## Package Dimensions

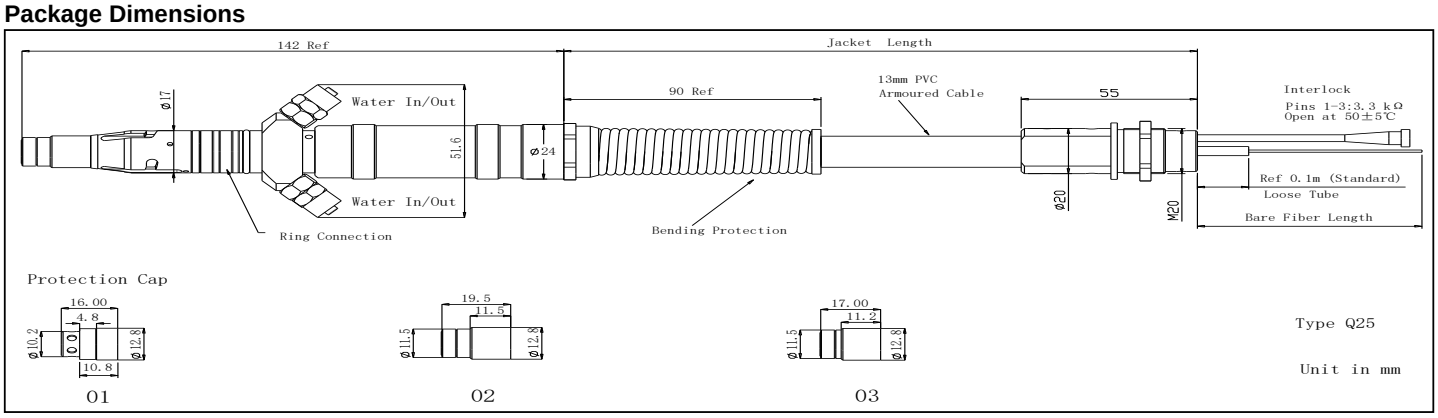


## Ordering Information

**FOC**-①①-②②-③-④④-⑤⑤-⑥⑥-⑦-⑧⑧-⑨⑨

①①: Wavelength
95 - 950nm
08 - 1080nm
SS - Specify

②②: Connector Type
QB - QBH Compatible

③: Handling Power
2000 - 2000W
S - Specify

④④: Fiber Type
01 - Nufern GDF-20/400-M NA0.065
11 - Coractive DCF-UN 50/400 NA0.12
SS - Specify

⑤⑤: Jacket Length
15 - 15m 13mm PVC Armoured Cable
SS - Specify

⑥⑥: Bare Fiber Length With Loose Tube
02 - 2m
SS - Specify

⑦: Package Type
Q25 - Type Q25

⑧⑧: Protection Cap Type
01 - Aluminum Without Window
02 - Aluminum With Window For SM Fiber
03 - Aluminum With Window For MM Fiber
SS - Specify

⑨⑨: Water Pipe Length
05 - 5m×2pcs
NN - None
SS - Specify

# Fiber Optical Cable 19xx~20xxnm 100~200W

Spec Review No.: SR2501002A Date: Jan. 2, 2025

## Specifications

| Parameters | Unit | Values |
|---|---|---|
| Operating Wavelength | nm | 1950±50 |
| Typ. Transmission Ratio (Inner Core) | - | 99% |
| Min. Transmission Ratio (Inner Core) | - | 98% |
| Max. Handling Power (CW) | W | 1000 or Specify |
| Loss Power Handling Capability | - | 150W Continuously |
| Nominal Beam Pointing Accuracy | deg | 1 |
| Min. Beam Ellipticity | - | 0.95 |
| Max. Fiber Tensile Load | N | 5 |
| Package Material | - | Stainless Steel / Aluminum / Copper |
| Operating Temperature | ℃ | +10 to +50 |
| Storage Temperature | ℃ | -10 to +75 |
| Max. Water Pressure | Bar | 8 |
| Flow of Water | L/min | 1.5-3 |
| Fiber Length ≤15 m | - | The Fiber Length Tolerance is -10cm |
| 15m＜Fiber Length ≤30m | - | The Fiber Length Tolerance is -20cm |
| Jacket Length≤15m | - | The Jacket Length Tolerance is +0.2/-0.1m |
| 15m＜Jacket Length ≤30m | - | The Jacket Length Tolerance is +0.4/-0.2m |

*The actual dimensions may be different from above drawing due to different requirements, please see shipment data sheet.

*For FOC without window, the transmission @635nm is around 80%(Inner Core).

*The material must be RoHS compliant.

## Package Dimensions

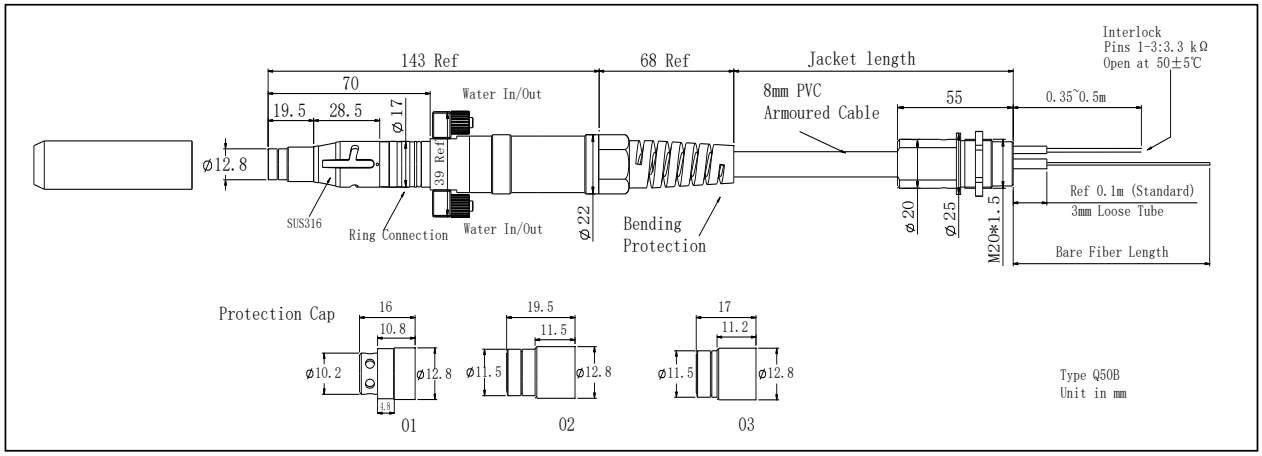


## Ordering Information

**FOC**-①①-②②-③-④④-⑤⑤-⑥⑥-⑦-⑧⑧-⑨⑨

①①: Wavelength
19 - 1950nm
SS - Specify

②②: Connector Type
QB - QBH Compatible

③: Handling Power
1000 - 1000W
S - Specify

④④: Fiber Type
75 - Nufern LMA-GDF-25/400 NA0.09
SS - Specify

⑤⑤: Jacket Length
1.2 - 1.2m 8mm PVC Armoured Cable
10 - 10m 8mm PVC Armoured Cable
SS - Specify

⑥⑥: Bare Fiber Length With Loose Tube
01 - 1m
1.5 - 1.5m
SS - Specify

⑦: Package Type
Q50B - Type Q50B

⑧⑧: Protection Cap Type
01 - Aluminum Without Window
02 - Aluminum With Window For SM Fiber
03 - Aluminum With Window For MM Fiber
SS - Specify

⑨⑨: Water Pipe Length
03 - 3m×2pcs
NN - None
SS - Specify

# Fiber Optical Cable - Type D1 (Indirect water cooling) 10xxnm 20000W

Spec Review No.: CAT-05-081B

**Specifications**

| Parameters | Unit | Values |
|---|---|---|
| Operating Wavelength | nm | 1050～1110（Nominal Center Wavelength 1080 nm） |
| Typ. Transmission Ratio (Inner Core) | - | 99% |
| Min. Transmission Ratio (Inner Core) | - | 98% |
| Max. Handling Power (CW) | W | 6000,8000,10000,12000,20000 or Specify |
| Pulse Power | - | Max. 10KW @10ms<br>Max. 50KW @1ms<br>Max. 1MW @50ns |
| Loss Power Handling Capability | - | 1KW for 10 min<br>500W Continuously |
| Nominal Beam Pointing Accuracy | deg | 1 |
| Min. Beam Ellipticity | - | 0.92 |
| Max. Fiber Tensile Load | N | 5 |
| Package Material | - | Stainless Steel / Aluminum / Copper |
| Operating Temperature | ℃ | +10 to +50 |
| Storage Temperature | ℃ | -30 to +75 |
| Max. Water Pressure | Bar | 8 |
| Flow of Water | L/min | 1.5-3 |
| Fiber Length ≤15 m | - | The Fiber Length Tolerance is -10cm |
| 15m＜Fiber Length ≤30m | - | The Fiber Length Tolerance is -20cm |
| Jacket Length≤15m | - | The Jacket Length Tolerance is +0.2/-0.1m |
| 15m＜Jacket Length ≤30m | - | The Jacket Length Tolerance is +0.4/-0.2m |

*The actual dimensions may be different from above drawing due to different requirements,please see shipment data sheet.

*For FOC without window,the transmission @635nm is around 80%(Inner Core).

*The material must be RoHS compliant.

**Package Dimensions**

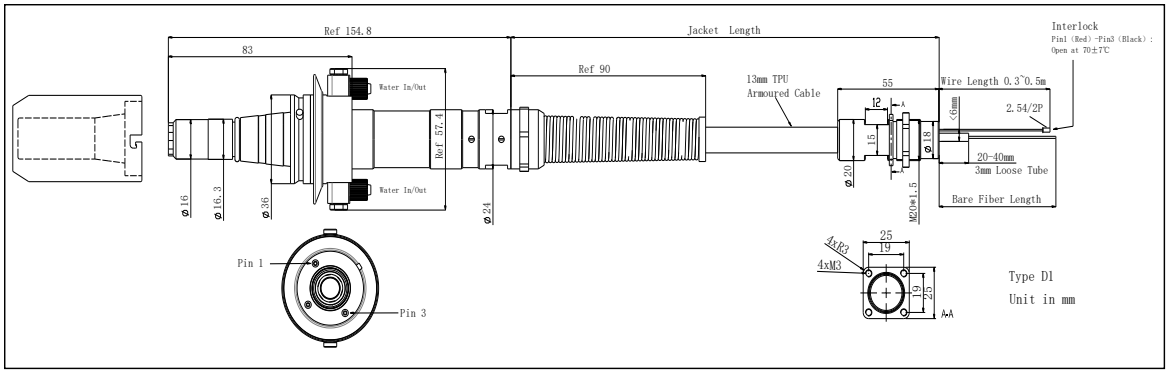


**Ordering Information**

**FOC**-①①-②②-③-④④-⑤⑤-⑥⑥-⑦-⑧⑧-⑨⑨

①①: Wavelength
08 - 1080nm
SS - Specify

②②: Connector Type
QD - QD Compatible

③: Handling Power
6000 - 6000W
8000 - 8000W
10000 - 10000W
12000 - 12000W
20000 - 20000W
S - Specify

④④: Fiber Type
03 - Nufern BD-S100/120/360-STN NA0.22
04 - Nufern BD-S200/230/660-STN NA0.22
05 - Nufern BD-S200/220/360-STN NA0.22
63 - Nufern BD-S150/180/660-STN NA0.22
95 - Passive-200/235/360 DC NA0.23
SS - Specify

⑤⑤: Jacket Length
15 - 15m 13mm TPU Armoured Cable
SS - Specify

⑥⑥: Bare Fiber Length With Loose Tube
1.5 - 1.5m
02 - 2m
SS - Specify

⑦: Package Type
D1 - Type D1

⑧⑧: Protection Cap Type
01 - Aluminum Without Window
SS - Specify

⑨⑨: Water Pipe Length
05 - 5×2m
NN - None
SS - Specify

# Fiber Optical Cable - Type P1 (Indirect water cooling) 10xxnm 40000W

Spec Review No.: CAT-05-090A

## Specifications

| Parameters | Unit | Values |
|---|---|---|
| Operating Wavelength | nm | 1050～1110（Nominal Center Wavelength 1080 nm） |
| Typ. Transmission Ratio (Inner Core) | - | 99% |
| Min. Transmission Ratio (Inner Core) | - | 98% |
| Max. Handling Power (CW) | W | 20000,30000,40000 or Specify |
| Pulse Power | - | Max. 10kW @10ms<br>Max. 50kW @1ms<br>Max. 1MW @50ns |
| Loss Power Handling Capability | - | 1.5kW for 10 min（Forward）<br>1kW Continuously（Backward） |
| Nominal Beam Pointing Accuracy | deg | 1 |
| Min. Beam Ellipticity | - | 0.92 |
| Max. Fiber Tensile Load | N | 5 |
| Package Material | - | Stainless Steel / Aluminum / Copper |
| Operating Temperature | ℃ | +10 to +50 |
| Storage Temperature | ℃ | -30 to +75 |
| Max. Water Pressure | Bar | 8 |
| Flow of Water | L/min | ⩾4 |
| Fiber Length ⩽15 m | - | The Fiber Length Tolerance is -10cm |
| 15m＜Fiber Length ⩽30m | - | The Fiber Length Tolerance is -20cm |
| Jacket Length⩽15m | - | The Jacket Length Tolerance is +0.2/-0.1m |
| 15m＜Jacket Length ⩽30m | - | The Jacket Length Tolerance is +0.4/-0.2m |

* The actual dimensions may be different from above drawing due to different requirements, please see shipment data sheet.

* For FOC without window, the transmission @635nm is around 80%.

* The material must be RoHS compliant.

## Package Dimensions

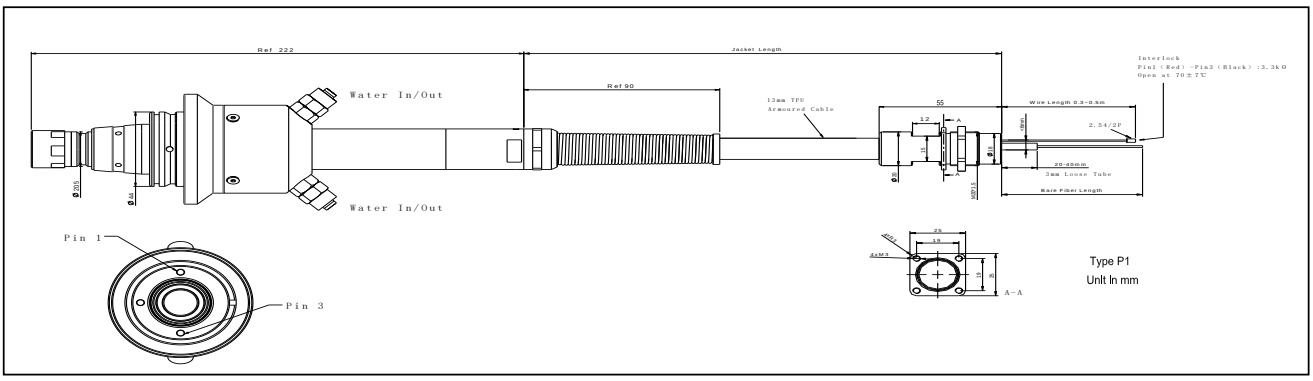


## Ordering Information

**FOC**-①①-②②-③-④④-⑤⑤-⑥⑥-⑦-⑧⑧-⑨⑨

①①: Wavelength
08 - 1080nm
SS - Specify

②②: Connector Type
Q+ - Q+ Compatible

③: Handling Power
20K - 20kW
30K - 30kW
40K - 40kW
S - Specify

④④: Fiber Type
163–YOFC SI 100/120/360-22/540(DC) NA0.22
131-YOFC SI 100/120/360-15/540(DC) NA0.15
SS - Specify

⑤⑤: Jacket Length
35 - 35m φ13mm TPU Armoured Cable
SS - Specify

⑥⑥: Bare Fiber Length With Loose Tube
1.5 - 1.5m
SS - Specify

⑦: Package Type
P1 - Type P1

⑧⑧: Protection Cap Type
01 - Aluminum Without Window
SS - Specify

⑨⑨: Water Pipe Length
05 - 5×2m
NN - None
SS - Specify

# Ultra-fast Laser Cable Connector 5xxnm 100W

Spec Review No.: SE2407005A Date:Aug.19, 2024

## Specifications

| Parameters | Unit | Values |
|---|---|---|
| Operating Wavelength | nm | 530 |
| Operating Wavelength Range | nm | ±20 |
| Min. Transmission Ratio(Design Assurance) | - | 70% |
| Max. Handling Power (CW) | W | 20 |
| Nominal Beam Diameter Ratio(Design Assurance) | mm | 1.3±0.2@ over 5~1000mm from Output Surface |
| Nominal Mode Field Diameter | μm | 8.6±1 |
| Max. Water Pressure | Bar | 4 |
| Bending Radius | mm | > 250 |
| Max. Tensile Load | N | 10 |
| Operating Temperature | ℃ | +10 to +50 |
| Storage Temperature | ℃ | -10 to +75 |
| Fiber Type | - | Micro Structured Hollow Core Fiber |
| Beam Parameter Acceptance | - | Single Mode Laser Beam |
| Materials | - | Stainless steel ,Aluminum alloy ,Copper |

*The actual dimensions may be different from above drawing due to different requirements，please see shipment data sheet.

*The material must be ROHS compliant

## Package Dimensions

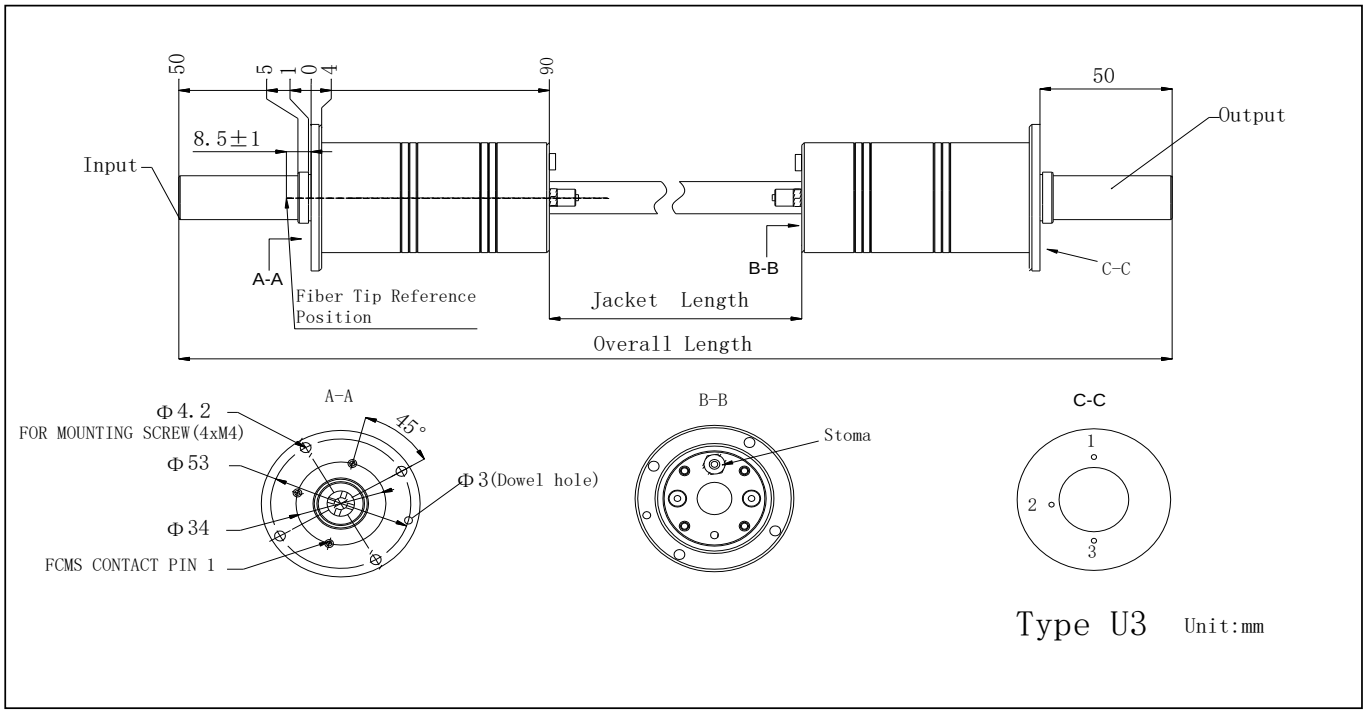


## Ordering Information

**ULC**-①①-②②-③-④④-⑤⑤-⑥-⑦

①①: Wavelength
53 - 530nm
SS - Specify

②②: Connector Type
UL - UL Compatible

③: Handling Power
20 - 20W
SS - Specify

④④: Fiber Type
SS - Specify

⑤⑤: Jacket Length
03 - 3m 13mm Armoured Cable
SS - Specify

⑥: Package Type
U3 - Type U3

⑦: Cooling Mothed
01 - Water cooling
02 - Air cooling

# Ultra-fast Laser Cable Connector 10xxnm 200W

Spec Review No.: SR2006006C Date:Aug. 20, 2024

## Specifications

| Parameters | Unit | Values |
|---|---|---|
| Operating Wavelength | nm | 1060 |
| Operating Wavelength Range | nm | ±20 |
| Min. Transmission Ratio | - | 88%±2%@10m Fiber Length |
| Max. Average Laser Power | W | 40 |
| Min. Pulse Energy@800kHz | μJ | 50 |
| Pulse Width | fs | 400 |
| Nominal Mode Field Diameter | μm | 38±2 |
| Flow of Water | L/min | 1.5~3 |
| Max. Water Pressure | Bar | 4 |
| Bending Radius | mm | > 250 |
| Max. Tensile Load | N | 10 |
| Operating Temperature | ℃ | +10 to +50 |
| Storage Temperature | ℃ | -10 to +75 |
| Fiber Type | - | Micro Structured Hollow Core Fiber |
| Beam Parameter Acceptance | - | Single Mode Laser Beam |
| Materials | - | Stainless steel ,Aluminum alloy ,Copper |

*The actual dimensions may be different from above drawing due to different requirements，please see shipment data sheet.

*The material must be ROHS compliant

## Package Dimensions

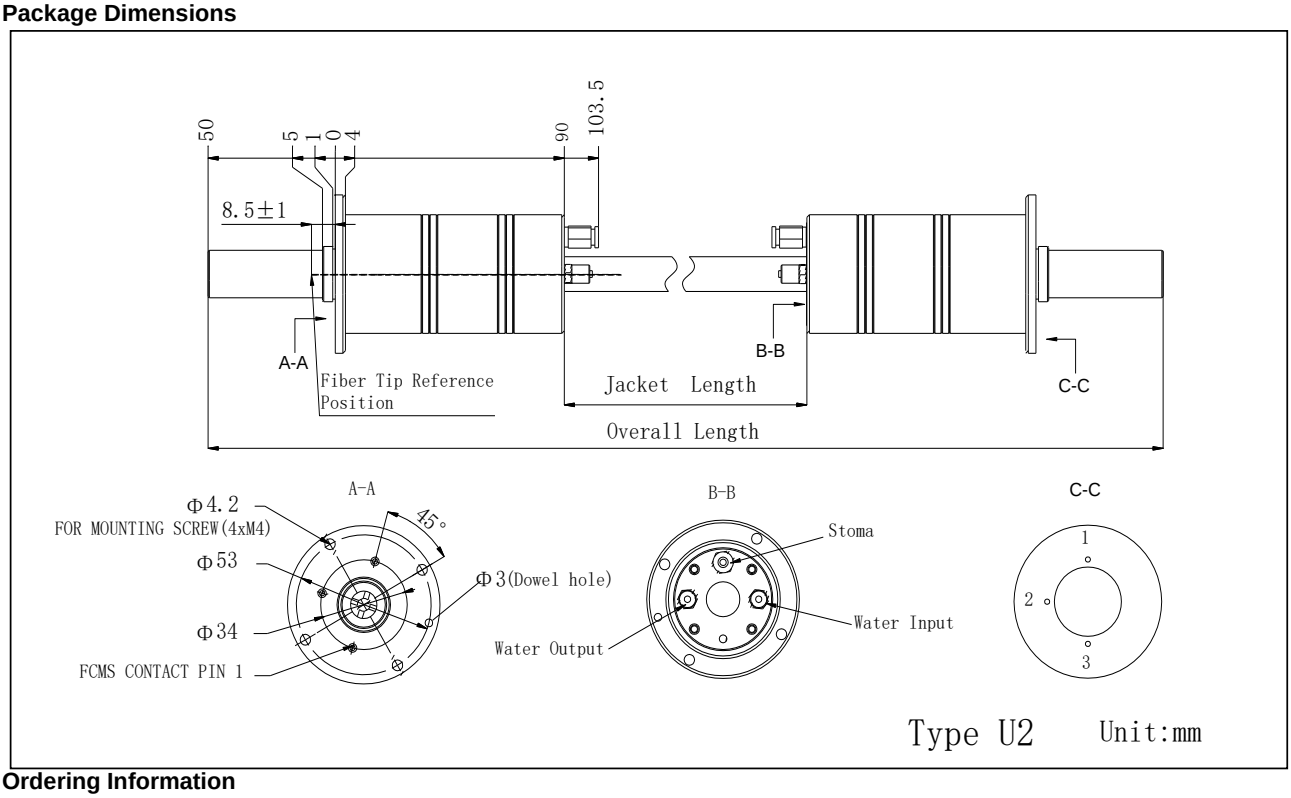


## Ordering Information

**ULC**-①①-②②-③-④④-⑤⑤-⑥-⑦

①①: Wavelength
03 - 1030nm
06 - 1060nm
SS - Specify

③: Handling Power
20 - 20W
40 - 40W
SS - Specify

⑤⑤: Jacket Length
10 - 10m 13mm Armoured Cable
SS - Specify

②②: Connector Type
UL - UL Compatible

④④: Fiber Type
01 - YSL HC-PCF-01
SS - Specify

⑥: Package Type
U2 - Type U2

⑦: Cooling Mothed
1 - Water Cooling

# MMLarge Beam Collimator 9xxnm 100W

Spec Review No.: SR2307010A Date: Jul. 4, 2023

## Specifications

| Parameters | Unit | Values |
|---|---|---|
| Operating Wavelength | nm | 976 |
| Operating Wavelength Range | nm | ±20 |
| Nominal Beam Diameter(@1/$e^2$,NA0.22) | mm | 6.0±0.5@ over 5mm from Output Surface |
| Typ. Transmission(Inner Core) | - | 98% |
| Min. Transmission(Inner Core) | - | 97% |
| Min. Transmission Ratio@635nm | - | 50%(Based on Reference w/o AR Coating) |
| Min. Return Loss | dB | 20 |
| Max. Optical Power (CW) | W | 100 or Specify |
| Loss Power Handling Capability | - | NA |
| Nominal Beam Pointing Accuracy | deg | 1 |
| Max. Beam Divergence Angle (Full Angle) | mrad | 30 |
| Min. Beam Ellipticity | - | 0.92 |
| Max. Tensile Load | N | 5 |
| Outer Package Material | - | Stainless Steel / Aluminum |
| Operating Temperature | ℃ | 5 to +40 |
| Storage Temperature | ℃ | -40 to +85 |

*The actual dimensions may be different from above drawing due to different requirements,please see shipment data sheet.

*Thermistor is embeded & the wire integrated in armoured cable.

*The material must be RoHS compliant.

## Package Dimensions

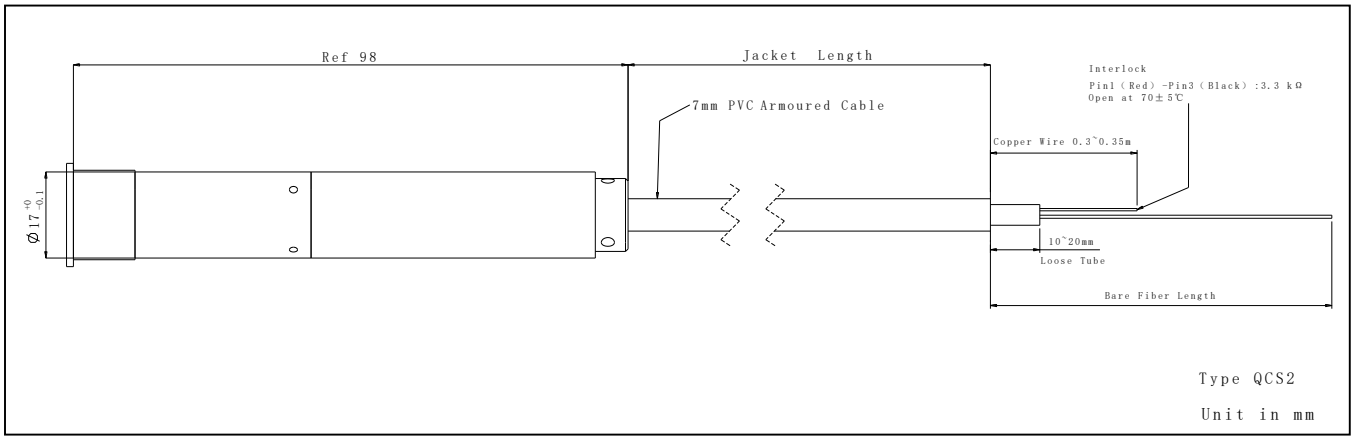


## Ordering Information

**MMLBC**-①①-②②-③-④-⑤⑤-⑥⑥-⑦⑦-⑧⑧⑧⑧-⑨

①①: Wavelength
6397 - 635/976nm
SS - Specify

②②: Beam Diameter
60 - 6.0mm
SS - Specify

③:Fiber Jacket
N - 7mm PVC Armoured Cable
SS - Specify

④: Handling Power
100 - 100W
SS - Specify

⑤⑤:Fiber Type
10 - YH 400/440-26/730
SS - Specify

⑥⑥: Jacket Length
02 - 2.0m
SS - Specify

⑦⑦: Bare Fiber Length
1.5 - 1.5m
SS - Specify

⑧⑧⑧⑧:Body Type
QCS2 - φ17

⑨:Cladding Power Stripping
N - None

# Large Beam Collimator 10xxnm 5~100W

Spec Review No.: SR2209049A Date:Sep. 23, 2022

## Specifications

| Parameters | Unit | Values |
|---|---|---|
| Operating Wavelength | nm | 1064 |
| Operating Wavelength Range | nm | ±20 |
| Nominal Beam Diameter@M2<1.3 | mm | 4.5+/-0.3@ over 5~1000mm from Output Surface |
| Typ. Transmission | - | 95% |
| Min. Transmission | - | 92% |
| Min. Return Loss | dB | 50 |
| Max. PDL | dB | 0.05 |
| Max. Optical Power (CW) | W | 20 or Specify |
| Nominal Beam Pointing Accuracy | deg | 0.5 |
| Max. Beam Divergence Angle (Full Angle) | mrad | 0.6 |
| Min. Ellipticity | - | 0.92 |
| Max. Tensile Load | N | 5 |
| Outer Package Material | - | Stainless Steel / Aluminum |
| Operating Temperature | ℃ | -5 to +70 |
| Storage Temperature | ℃ | -40 to +85 |

*The actual dimensions may be different from above drawing due to different requirements,please see shipment data sheet.

*The material must be RoHS compliant.

## Package Dimensions

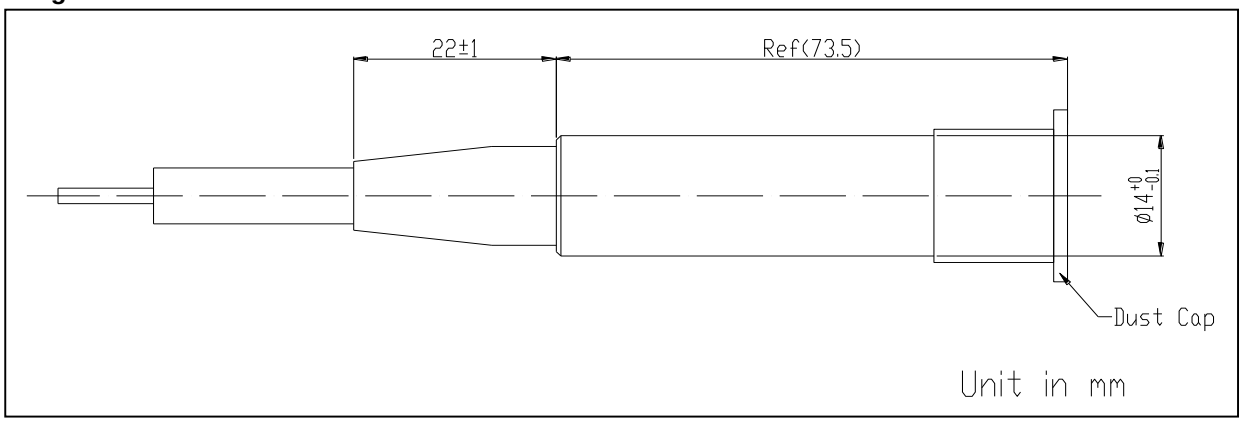


## Ordering Information

**LBC**-①①-②②-③-④④-⑤-⑥-⑦

①①: Wavelength
6306 - 635nm&1064nm
SS - Specify

②②: Beam Diameter
45 -4.5mm
SS - Specify

③: Fiber Jacket
B - 6mm Armoured Cable
S - Specify

④④: Handling Power
20 - 20W
SS - Specify

⑤: Fiber Type
38 - Nufern GDF 10/125-M NA0.075
S - Specify

⑥: Fiber Length
1.4 - 1.4m 1.2m Armoured Cable
0.1m Loose Tube
0.1m Fiber
S - Specify

⑦: Package Material
3 - Stainless Steel / Aluminum

# High Power Polarization Maintaining Large Beam Collimator 10xxnm 5~100W

Spec Review No.: SR2305087A Date: May. 25, 2023

## Specifications

| Parameters | Unit | Values |
|---|---|---|
| Operating Wavelength | nm | 1030 |
| Operating Wavelength Range | nm | ±20 |
| Nominal Beam Diameter (@M^2<1.2) | mm | 1.5+/-0.5 @ over 5~300mm from Output Surface |
| Typ. Transmission | - | 95% |
| Min. Transmission | - | 92% |
| Min. Return Loss | dB | 50 |
| Typ. Extinction Ratio (Only For Inner Core ) | dB | 18 |
| Min. Extinction Ratio (Only For Inner Core ) | dB | 16 |
| Max. Optical Power (CW) | W | 65 or Specify |
| Nominal Beam Pointing Accuracy | deg | 0.5 |
| Max Beam Divergence Angle (Full Angle) | mrad | 1.2 |
| Min. Ellipticity | - | 0.92 |
| Fiber Max. Tensile Load | N | 5 |
| Outer Package Material | | Stainless Steel /Aluminium |
| Operating Temperature | ℃ | -5 to +70 |
| Storage Temperature | ℃ | -40 to +85 |

*For special pulse applications,pls discuss with Optizone Technology.

* The material must be RoHS compliant.

*The actual dimensions may be different from above drawing due to different requirements,please see shipment data sheet.

## Package Dimensions

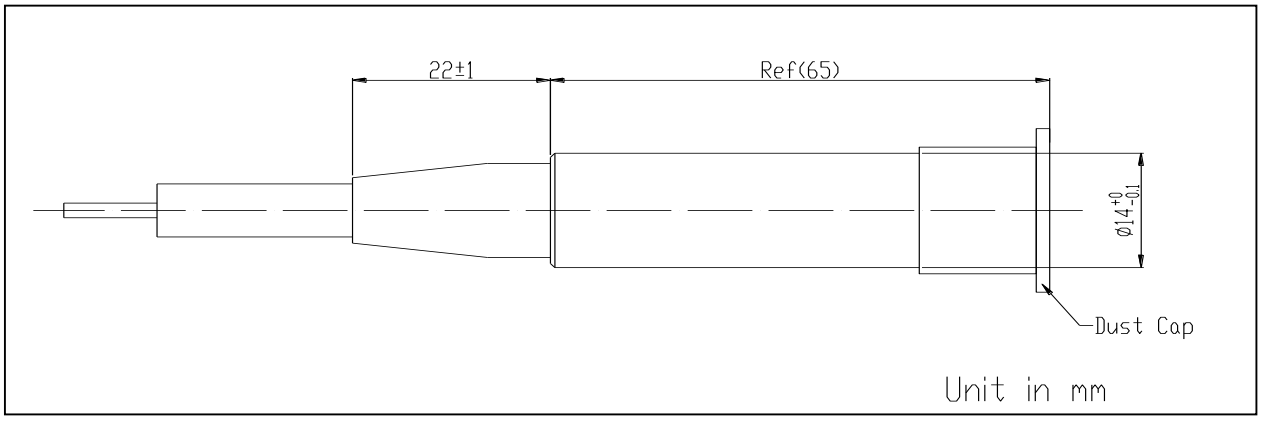


## Ordering Information

**PMLBC**-①①-②②-③-④④-⑤-⑥-⑦

①①: Wavelength
03 - 1030nm
SS - Specify

②②: Beam Diameter
15 - 1.5mm
SS - Specify

③: Fiber Jacket
L - 0.9mm Loose Tube
S - Specify

④④: Handling Power
65 -65W
SS - Specify

⑤: Fiber Type
21 - PLMA-GDF-20/130 NA0.08
S - Specify

⑥: Fiber Length
1 - 1m
0.5m Bare Fiber+0.5m Loose Tube
S - Specify

⑦: Package Material
3 - Stainless Steel /Aluminium

# Large Beam Collimator 10xxnm 500W

Spec Review No.: SR2106040C Date: Nov. 14, 2023

## Specifications

| Parameters | Unit | Values |
|---|---|---|
| Operating Wavelength | nm | 1064 |
| Operating Wavelength Range | nm | ±20 |
| Nominal Beam Diameter(@1/$e^2$,$M^2$<1.1) | mm | 6.0±0.5@ over 5~1000mm from Output Surface |
| Typ. Transmission(Inner Core) | - | 98% |
| Min. Transmission(Inner Core) | - | 97% |
| Min. Transmission Ratio@660nm | - | 70%(Based on Reference w/o AR Coating) |
| Min. Return Loss | dB | 50 |
| Max. Optical Power (CW) | W | 450 or Specify |
| Loss Power Handling Capability | - | Max. 10W Continuously |
| Nominal Beam Pointing Accuracy | deg | 0.5 |
| Max. Beam Divergence Angle (Full Angle) | mrad | 0.5 |
| Max. Beam Centrality | mm | 0.8(Test by CCD & Aperture Stop) |
| Min. Beam Ellipticity | - | 0.92 |
| Max. Tensile Load | N | 5 |
| Outer Package Material | - | Stainless Steel / Aluminum |
| Operating Temperature | ℃ | 5 to +40 |
| Storage Temperature | ℃ | -40 to +85 |

*The actual dimensions may be different from above drawing due to different requirements,please see shipment data sheet.

*Thermistor is embeded & the wire integrated in armoured cable.

*The material must be RoHS compliant.

## Package Dimensions

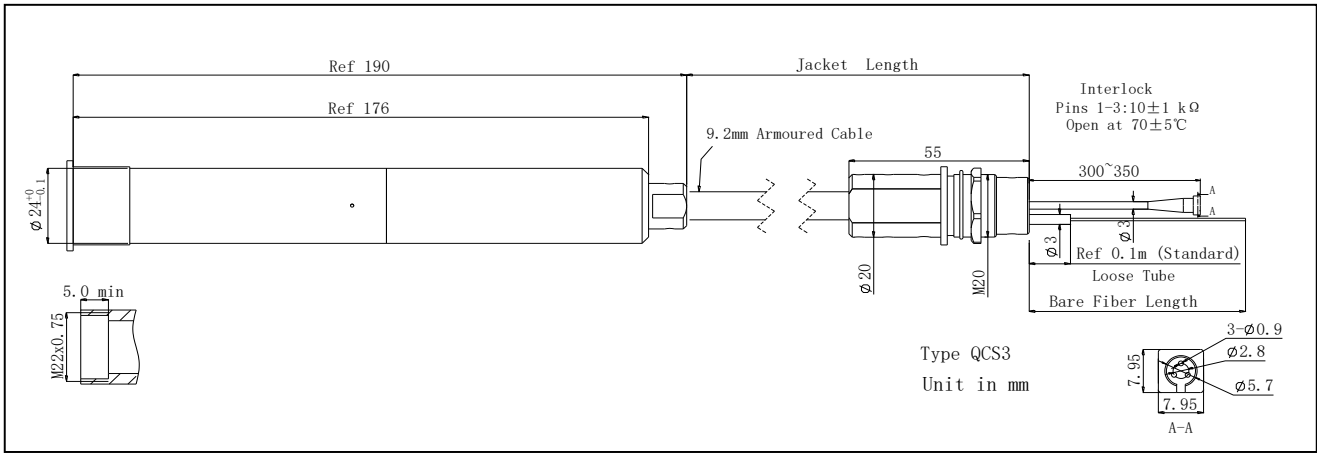


## Ordering Information

**LBC**-①①-②②-③-④-⑤⑤-⑥⑥-⑦⑦-⑧⑧⑧⑧-⑨

①①: Wavelength
6606 - 660/1064nm
SS - Specify

②②: Beam Diameter
60 - 6.0mm
SS - Specify

③:Fiber Jacket
G - 9.2mm Armoured Cable
S - Specify

④: Handling Power
450 - 450W
S - Specify

⑤⑤:Fiber Type
53 - Nufern LMA-GDF-14/250-HP-M,NA0.07
SS - Specify

⑥⑥: Jacket Length
05 - 5m
SS - Specify

⑦⑦: Bare Fiber Length
1.5 - 1.5m
SS - Specify

⑧⑧⑧⑧:Body Type
QCS3 - φ24

⑨:Cladding Power Stripping
Y - Yes
N - No

Form No.:D05-203-05 Rev.B

# Large Beam Collimator 10xxnm 600W

Spec Review No.: SR2401042A Date: Jan. 19, 2024

## Specifications

| Parameters | Unit | Values |
|---|---|---|
| Operating Wavelength | nm | 1064 |
| Operating Wavelength Range | nm | ±20 |
| Nominal Beam Diameter(@1/$e^2$,$M^2$<1.1) | mm | 5.0±0.5@ over 5~1000mm from Output Surface |
| Typ. Transmission | - | 98% |
| Min. Transmission | - | 97% |
| Min. Transmission Ratio(Red Light) | - | 50%(Based on Reference w/o AR Coating) |
| Min. Return Loss | dB | 50 |
| Max. Optical Power (CW) | W | 500 or Specify |
| Loss Power Handling Capability | | Max. 10W Continuously |
| Nominal Beam Pointing Accuracy | deg | 0.5 |
| Max. Beam Divergence Angle (Full Angle) | mrad | 0.5 |
| Max. Beam Centrality | mm | 0.8(Test by CCD & Aperture Stop) |
| Min. Beam Ellipticity | - | 0.92 |
| Max. Tensile Load | N | 5 |
| Outer Package Material | - | Stainless Steel / Aluminum |
| Operating Temperature | ℃ | 5 to +40 |
| Storage Temperature | ℃ | -40 to +85 |

## Package Dimensions

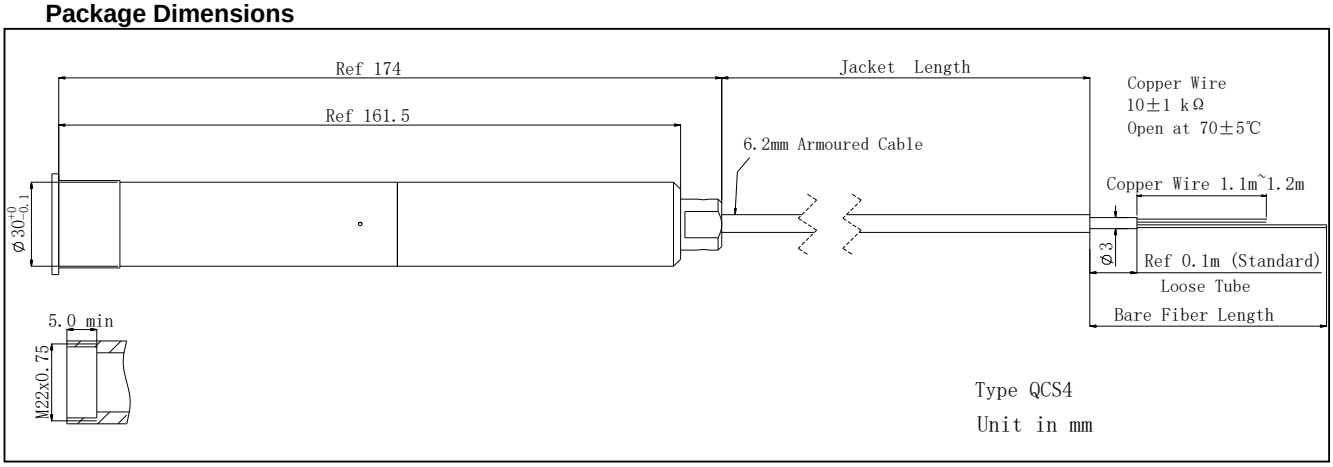


*The actual dimensions may be different from above drawing due to different requirements,please see shipment data sheet.

*Thermistor is embeded & the wire integrated in armoured cable.

*The material must be RoHS compliant.

## Ordering Information

**LBC**-①①-②②-③-④-⑤⑤-⑥⑥-⑦⑦-⑧⑧⑧⑧-⑨

①①: Wavelength
06 - 1064nm
SS - Specify

②②: Beam Diameter
50 - 5.0mm
SS - Specify

③:Fiber Jacket
B - 6.2mm Armoured Cable
S - Specify

④: Handling Power
500 - 500W
S - Specify

⑤⑤:Fiber Type
53 - Nufern LMA-GDF-14/250-HP-M,NA0.07
SS - Specify

⑥⑥: Jacket Length
05 - 5m
SS - Specify

⑦⑦: Bare Fiber Length
1.5 - 1.5m
SS - Specify

⑧⑧⑧⑧:Body Type
QCS4 - φ30

⑨:Cladding Power Stripping
Y - Yes
N - No

# Large Beam Collimator 10xxnm 700W

Spec Review No.: SR2310030C Date: Nov. 22, 2023

## Specifications

| Parameters | Unit | Values |
|---|---|---|
| Operating Wavelength | nm | 1080 |
| Operating Wavelength Range | nm | ±10 |
| Nominal Beam Diameter(@1/$e^2$,$M^2$<1.1) | mm | 12.0±1.0@ over 5~1000mm from Output Surface |
| Typ. Transmission | - | 98% |
| Min. Transmission | - | 97% |
| Min. Return Loss | dB | 50 |
| Max. Optical Power (CW) | W | 450 or Specify |
| Loss Power Handling Capability | - | Max. 10W Continuously |
| Nominal Beam Pointing Accuracy | deg | 0.5 |
| Max Beam Divergence Angle (Full Angle) | mrad | 0.3 |
| Max. Beam Centrality | mm | 0.8 |
| Min. Beam Ellipticity | - | 0.92 |
| Max. Tensile Load | N | 5 |
| Outer Package Material | - | Stainless Steel / Aluminum |
| Operating Temperature | ℃ | 5 to +40 |
| Storage Temperature | ℃ | -40 to +85 |

## Package Dimensions

*The actual dimensions may be different from above drawing due to different requirements,please see shipment data sheet.

*Thermistor is embeded & the wire integrated in armoured cable.

*The material must be RoHS compliant.

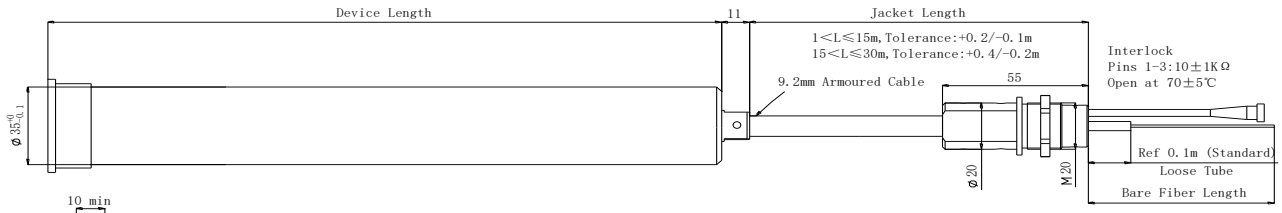


| | Beam Diameter | BD Tolerance | Device Length |
|---|---|---|---|
| 1 | 7mm | ±0.6mm | Ref 230mm |
| 2 | 8mm | ±0.6mm | |
| 3 | 9mm | ±0.8mm | |
| 4 | 10mm | ±0.8mm | Ref 260mm |
| 5 | 11mm | ±0.8mm | |
| 6 | 12mm | ±1.0mm | |
| 7 | 13mm | ±1.0mm | Ref 290mm |
| 8 | 14mm | ±1.0mm | |
| 9 | 15mm | ±1.0mm | |

Type QCS5

Unit in mm

## Ordering Information

**LBC**-①①-②②-③-④-⑤⑤-⑥⑥-⑦⑦-⑧⑧⑧⑧-⑨

①①: Wavelength
6308 - 635/1080nm
SS - Specify

②②: Beam Diameter
120 - 12.0mm
SS - Specify

③:Fiber Jacket
G - 9.2mm Armoured Cable

④: Handling Power
450 - 450W
S - Specify

⑤⑤:Fiber Type
40 - Liekki Passive 14/250 DC NA0.07
SS -Specify

⑥⑥: Jacket Length
05 - 5.0m
SS - Specify

⑦⑦: Bare Fiber Length
1.5 - 1.5m
SS - Specify

⑧⑧⑧⑧:Body Type
QCS5 - Φ35

⑨:Cladding Power
Y - Yes
N - No

Form No.:D05-203-05 Rev.B

# Large Beam Collimator 10xxnm 1000W

Spec Review No.: SR2408038A Date: Aug. 23, 2024

## Specifications

| Parameters | Unit | Values |
|---|---|---|
| Operating Wavelength | nm | 1064 |
| Operating Wavelength Range | nm | ±20 |
| Nominal Beam Diameter(@1/$e^2$,$M^2$=＜1.3) | mm | 8.0±1@ over 5~1000mm from Output Surface |
| Typ. Transmission(Inner Core) | - | 98% |
| Min. Transmission(Inner Core) | - | 97% |
| Min. Transmission Ratio@660nm | - | 70%(Based on Reference w/o AR Coating) |
| Max. Optical Power (CW) | W | 1500 or Specify |
| Nominal Beam Pointing Accuracy | deg | 0.5 |
| Max. Beam Divergence Angle (Full Angle) | mrad | 0.3 |
| Max. Beam Centrality | mm | 0.8(Test by CCD & Aperture Stop) |
| Min. Beam Ellipticity | - | 0.92 |
| Max. Tensile Load | N | 5 |
| Outer Package Material | - | Stainless Steel / Aluminum |
| Operating Temperature | ℃ | 5 to +40 |
| Storage Temperature | ℃ | -40 to +85 |

*The actual dimensions may be different from above drawing due to different requirements,please see shipment data sheet.

*Thermistor is embeded & the wire integrated in armoured cable.

*The material must be RoHS compliant.

## Package Dimensions

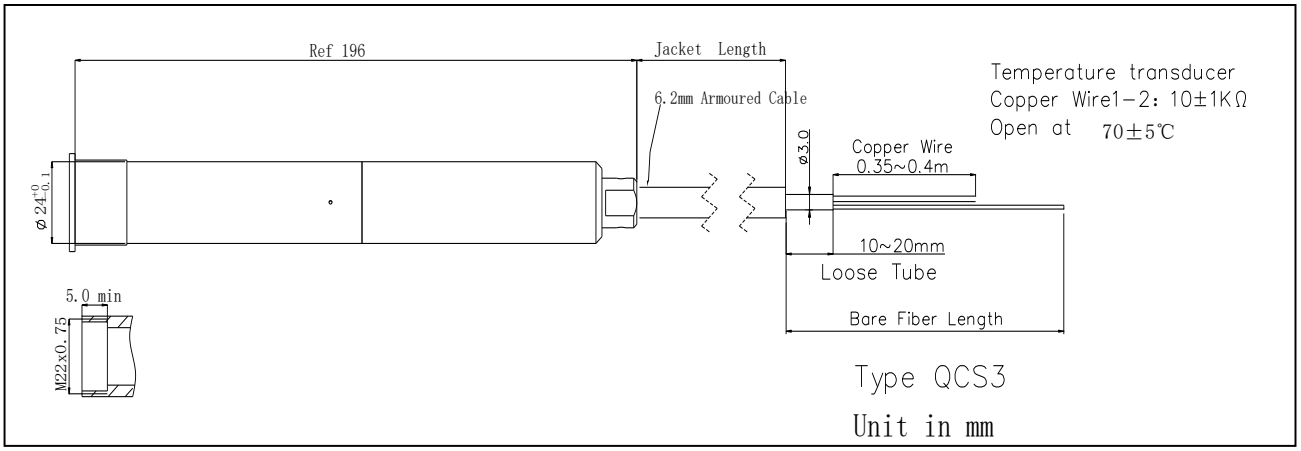


## Ordering Information

**LBC**-①①-②②-③-④-⑤⑤-⑥⑥-⑦⑦-⑧⑧⑧⑧-⑨

①①: Wavelength
6606 - 660/1064nm
SS - Specify

②②: Beam Diameter
80 - 8mm
SS - Specify

③:Fiber Jacket
B - 6.2mm Armoured Cable
S - Specify

④: Handling Power
1500 - 1500W
S - Specify

⑤⑤:Fiber Type
83 - YOFC GDF_DC 20/250 NA0.065
SS - Specify

⑥⑥: Jacket Length
2.2 - 2.2m
SS - Specify

⑦⑦: Bare Fiber Length
1.5 - 1.5m
SS - Specify

⑧⑧⑧⑧:Body Type
QCS3 - φ24

⑨:Cladding Power Stripping
N - No

# Large Beam Collimator 10xxnm 3000W

Spec Review No.:SR2201010B Date: Jun.17, 2024

## Specifications

| Parameters | Unit | Values |
|---|---|---|
| Operating Wavelength | nm | 1070 |
| Operating Wavelength Range | nm | ±30 |
| Nominal Beam Diameter(@1/$e^2$,$M^2$<1.1) | mm | 25.0 ±2.0 @ 5mm~2000mm from Output Surface |
| Typ. Transmission(Inner Core) | - | 98% |
| Min. Transmission(Inner Core) | - | 97% |
| Min. Transmission Ratio@635nm | - | 50%(Based on Reference w/o AR Coating) |
| Max. Optical Power (CW) | W | 2000 or Specify |
| Nominal Beam Pointing Accuracy | deg | 0.5 |
| Max Beam Divergence Angle (Full Angle) | mrad | 0.3 |
| Max. Beam Centrality | mm | 0.8(Test by CCD & Aperture slot) |
| Min. Beam Ellipticity | - | 0.93 |
| Max. Tensile Load | N | 5 |
| Outer Package Material | - | Stainless Steel / Aluminum |
| Operating Temperature | ℃ | +5 to +40 |
| Storage Temperature | ℃ | -40 to +85 |

* The actual dimensions may be different from above drawing due to different requirements,please see shipment data sheet.
* Thermistor is embeded & the wire integrated in armoured cable.
* The material must be RoHS compliant.

## Package Dimensions

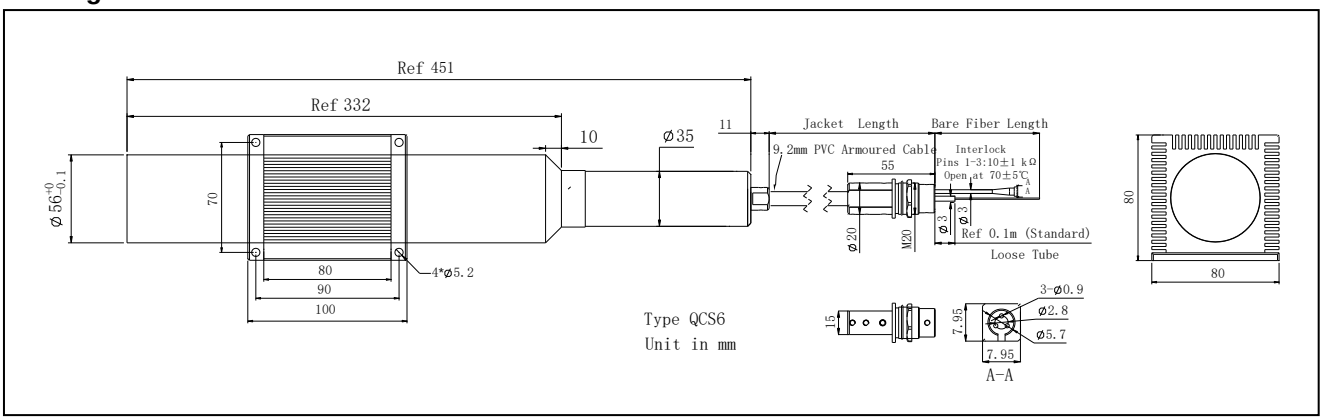


## Ordering Information

**LBC**-①①-②②-③-④-⑤⑤-⑥⑥-⑦⑦-⑧⑧⑧⑧-⑨

①①: Wavelength
6307 - 635/1070nm
SS - Specify

②②: Beam Diameter
250 - 25.0mm
SS - Specify

③:Fiber Jacket
G - 9.2mm PVC Armoured Cable
S - Specify

④: Handling Power
2000 - 2000W
S - Specify

⑤⑤:Fiber Type
22 - Nufern GDF-20/400-M NA0.065
SS -Specify

⑥⑥: Jacket Length
05 - 5.0m
SS - Specify

⑦⑦: Bare Fiber Length
1.5 - 1.5m
SS - Specify

⑧⑧⑧⑧:Body Type
QCS6 - Φ56

⑨: Cladding Power Stripping
N - None

# Large Beam Collimator 19xxnm 50W

Spec Review No.: SR2003008A Date: Mar. 2, 2020

## Specifications

| Parameters | Unit | Values |
|---|---|---|
| Operating Wavelength | nm | 1930 |
| Operating Wavelength Range | nm | ±20 |
| Nominal Beam Diameter | mm | 5.0±0.5 @ over 5~500mm from Output Surface |
| Typ. Transmission | - | 95% |
| Min. Transmission | - | 92% |
| Min. Return Loss | dB | 50 |
| Max. PDL | dB | 0.05 |
| Max. Optical Power (CW) | W | 10 or Specify |
| Nominal Beam Pointing Accuracy | deg | 0.5 |
| Max. Beam Divergence Angle (Full Angle) | mrad | 1.0 |
| Min. Beam Ellipticity | - | 0.92 |
| Max. Tensile Load | N | 5 |
| Outer Package Material | - | Stainless Steel / Aluminum |
| Operating Temperature | ℃ | -5 to +70 |
| Storage Temperature | ℃ | -40 to +85 |

*The material must be RoHS compliant.

## Package Dimensions

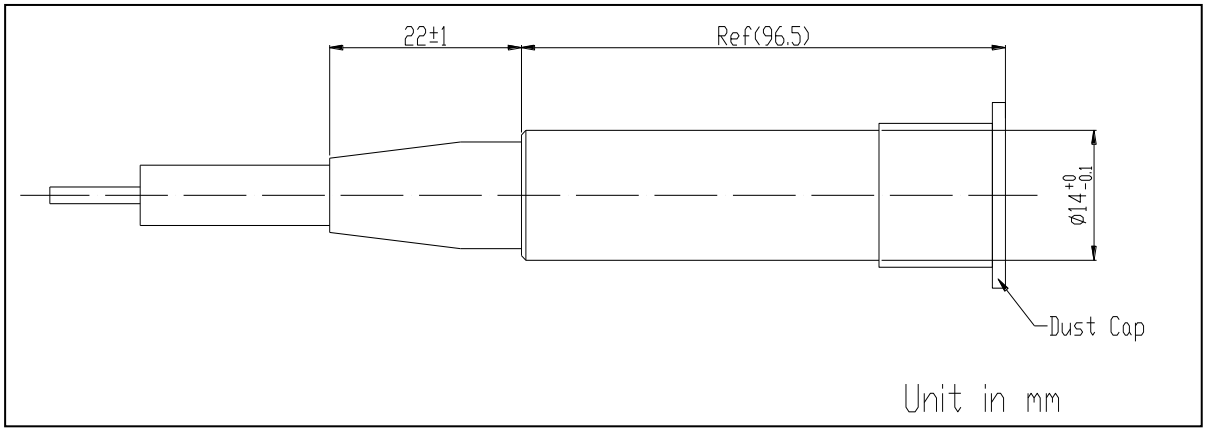


*The actual dimensions may be different from above drawing due to different requirements,please see shipment data sheet.

## Ordering Information

**LBC**-①①-②②-③-④④-⑤-⑥-⑦

①①: Wavelength
19 - 1930nm
SS - Specify

②②: Beam Diameter
50 - 5.0mm
SS - Specify

③: Fiber Jacket
L - 900um Loose Tube
A - 3mm Armoured Cable
S - Specify

④④: Handling Power
10 - 10W
SS - Specify

⑤: Fiber Type
11 - Nufern SM-GDF-10/130-15FA NA0.15
S - Specify

⑥: Fiber Length
2.2 - 2.2m
2.0m Armoured Cable
0.1m Loose Tube
0.1m Bare Fiber
S - Specify

⑦: Package Material
3 - Stainless Steel / Aluminum

# Large Beam Collimator 20xxnm 200W

Spec Review No.: SR2403016A Date: Mar. 07, 2024

## Specifications

| Parameters | Unit | Values |
|---|---|---|
| Operating Wavelength | nm | 1940 |
| Operating Wavelength Range | nm | ±10 |
| Nominal Beam Diamter | mm | 2.9±0.3@ over 5~1000mm from Output Surface |
| Typ. Transmission | - | 97% |
| Min. Transmission | - | 95% |
| Min. Return Loss | dB | 50 |
| Max. Optical Power (CW) | W | 200 or Specify |
| Nominal Beam Pointing Accuracy | deg | 0.5 |
| Max Beam Divergence Angle (Full Angle) | mrad | 1 |
| Min. Beam Ellipticity | - | 0.92 |
| Max. Tensile Load | N | 5 |
| Outer Package Material | | Stainless Steel / Aluminum |
| Operating Temperature | ℃ | 5 to +40 |
| Storage Temperature | ℃ | -40 to +85 |

## Package Dimensions

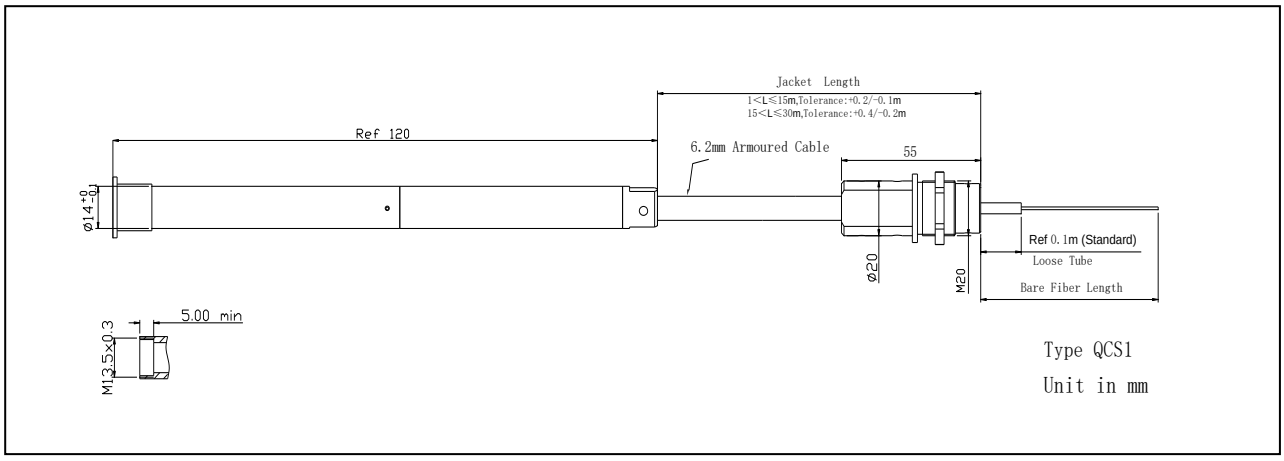


*The actual dimensions may be different from above drawing due to different requirements,please see shipment data sheet.

*The material must be RoSH compliant.

## Ordering Information

**LBC**-①①-②②-③-④-⑤⑤-⑥⑥-⑦⑦-⑧⑧⑧⑧-⑨

①①: Wavelength
94- 1940nm
SS - Specify

②②: Beam Diameter
29 - 2.9mm
SS - Specify

③:Fiber Jacket
B - 6.2mm Armoured Cable
SS - Specify

④: Handling Power
200 - 200W
S - Specify

⑤⑤:Fiber Type
52- Nufern LMA-GDF-25/400 NA0.09
SS - Specify

⑥⑥: Jacket Length
03 - 3m Armoured Cable
SS - Specify

⑦⑦: Bare Fiber Length
01 - 1m
SS - Specify

⑧⑧⑧⑧:Body Type
QCS1 - ψ14

⑨:Cladding Power Stripping
N - No

# High Power Polarization Maintaining Fiber Collimator 10xxnm 50W

Spec Review No: SR2002012A Date: Feb. 26, 2020

**Specifications**

| Parameters | Unit | Values |
|---|---|---|
| Center Wavelength | nm | 1064 |
| Operating Wavelength Range | nm | ±20 |
| Nominal Beam Diameter | mm | 0.50±0.06@100mm WD |
| Working Distance | mm | 100 or Specify |
| Typ. Transmission | - | 98% |
| Min. Transmission | - | 95% |
| Max. Beam Divergence Angle (Full Angle) | mrad | 3.5 |
| Min. Beam Ellipticity | - | 0.92 |
| Min. Return Loss | dB | 50 |
| Min. Extinction Ratio | dB | 15 |
| Max. Optical Power (CW) | W | 10、30、50 or Specify |
| Max. Tensile Load | N | 5 |
| Operating Temperature | ℃ | -5 to +70 |
| Storage Temperature | ℃ | -40 to +85 |

*The material must be RoHS compliant.

**Package Dimensions**

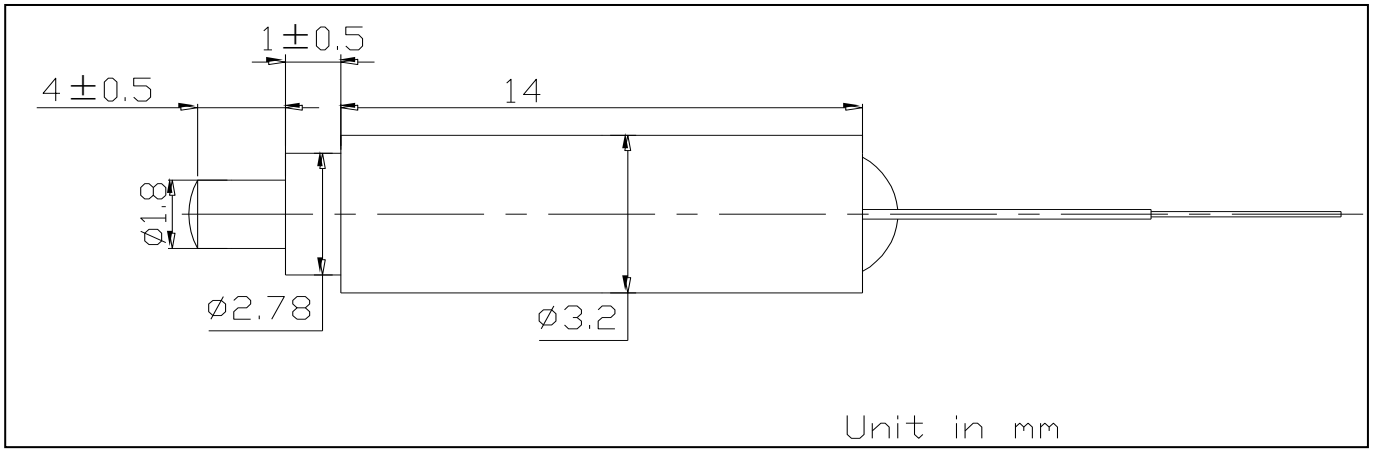


**Ordering Information**

**HPMC**-①①-②②-③③-④-⑤⑤-⑥-⑦-⑧

①①: Wavelength
06 - 1064nm
SS - Specify

②②: Beam Diameter
05 - 0.5mm
SS - Specify

③③: Working Distance
100 - 100mm
SS - Specify

④: Fiber Jacket
L - 900um Loose Tube
D - Bare Fiber
S - Specify

⑤⑤: Handling Power
30 - 30W
50 - 50W
SS - Specify

⑥: Fiber Type
43 - PLMA-GDF 25/250-M NA0.065
S - Specify

⑦: Fiber Length
1 - 1.0m
S - Specify

⑧: Package Type
2 - Dia 3.2*14
S - Specify

Form No.: D05-203-05 Rev.B

# High Power Polarization Maintaining Fiber Collimator 10xxnm 200W

Spec Review No: SR2011016E Date:Feb. 07, 2025

## Specifications

| Parameters | Unit | Values |
|---|---|---|
| Center Wavelength | nm | 1064 |
| Operating Wavelength Range | nm | ±20 |
| Nominal Beam Diameter | mm | 0.75±0.08@150mm WD |
| EFL of Lens | mm | 10 |
| Working Distance | mm | 150 or Specify |
| Typ. Transmission | - | 98% |
| Min. Transmission | - | 95% |
| Nominal Beam Pointing Accuracy | deg | 0.5 |
| Max. Beam Pointing Accuracy | deg | 1.5 |
| Max. Beam Divergence Angle (Full Angle) | mrad | 2.4 |
| Min. Beam Ellipticity | - | 0.95@5mm, 150mm, 0.97@600mm, 900mm |
| M^2 Degradation | - | < 10% |
| Min. Return Loss | dB | 50 |
| Min. Extinction Ratio | dB | 15 |
| Max. Optical Power (CW) | W | 200 （peak power 100kW (10ns) Max Cladding power: 2W ） |
| Max. Tensile Load | N | 5 |
| Operating Temperature | ℃ | -5 to +70 |
| Storage Temperature | ℃ | -40 to +85 |

*Parameters of active optical fiber need to be guaranteed by design.

*The material must be RoHS compliant.

## Package Dimensions

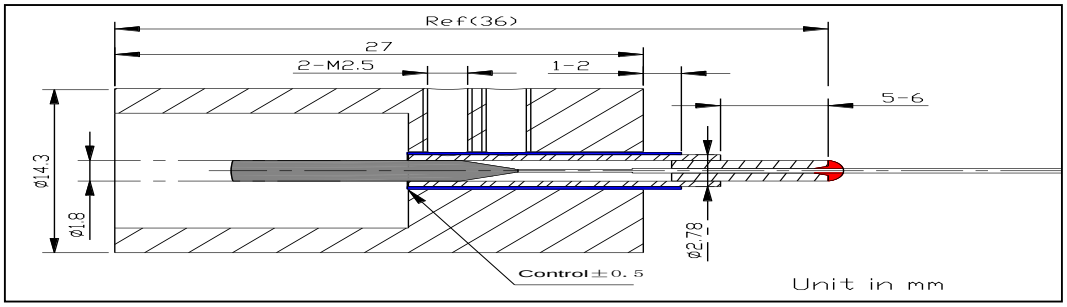


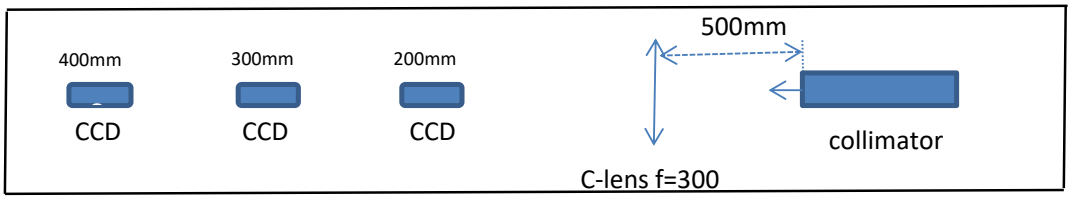


## Ordering Information

**HPMC**-①①-②②-③③-④-⑤⑤⑤-⑥-⑦-⑧

①①: Wavelength
06 - 1064nm
03 - 1030nm

②②: Beam Diameter
075 - 0.75mm
SS - Specify

③③: Working Distance
150 - 150mm
SS - Specify

④: Fiber Jacket
D - Bare Fiber
S - Specify

⑤⑤⑤: Handling Power
200 - 200W
SS - Specify

⑥: Fiber Type
72 - Nufern PLMA-YDF-25/250-M NA0.065
S - Specify

⑦: Fiber Length
1.3 - 1.3m
3.3 - 3.3m
S - Specify

⑧: Package Type
15 - Dia 14.3*27
S - Specify

# Polarization Maintaining (1+1)X1 MultiMode Pump &Signal Combiner 10xxnm 10W

Spec Review No.:SR2310052A Date: Oct. 12, 2023

## Specifications

| Parameters | | Unit | Values |
|---|---|---|---|
| Pump Wavelength | | nm | 976 (800-1000nm) |
| Signal Wavelength | | nm | 1064 (1060-1080nm) |
| Fiber Type | Pump Fiber | - | NUFERN MM-S105/125-22A |
| | Signal Input Fiber | - | NUFERN PM-GDF-5/130 |
| | Output Fiber | - | NUFERN PM-GDF-5/130 |
| Min.Pump Efficiency | | % | 92 |
| Max.Signal Insertion Loss | | dB | 0.5 |
| Max.Pump Power Handling (Per port) | | W | 10 |
| Min. PER (Inner Core) | | dB | 20 |
| Operating Temperature | | °C | -5 to 75 |
| Storage Temperature | | °C | -40 to 85 |
| Package | | mm | 50(L) x5(W) x5(H) |

*Above specifications are for device without connector.

*Port mark with digital labeling

*The material must be RoHS compliant.

## Package Dimensions

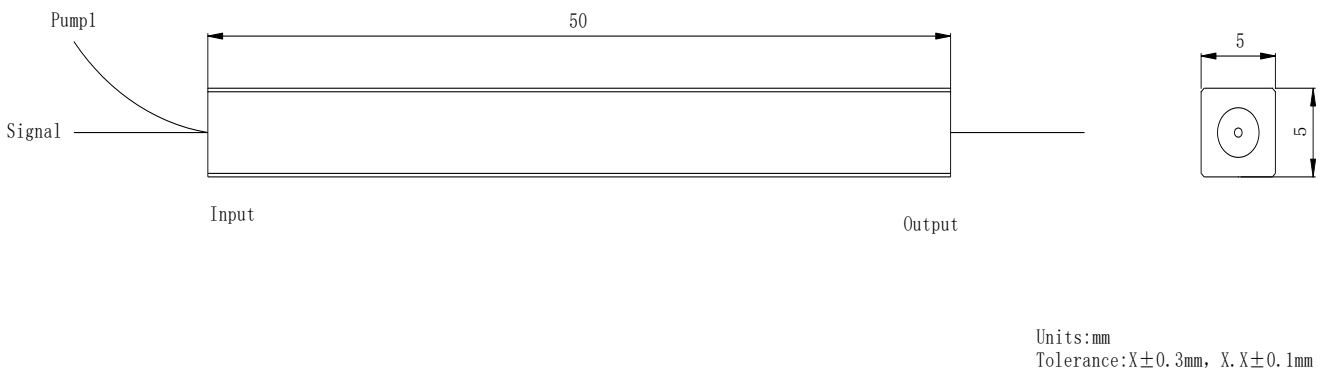


## Ordering Information

PMMPC-LC-(1+1)X1-①-②②②-③③③③-④④-⑤⑤-⑥⑥-⑦-⑧

①: Pump Propagation Direction
F - Forward
S - Specify

②②②:Pump Wavelength
976 - 976nm
SSS - Specify

③③③③: Signal Wavelength
1064 - 1064nm
SSSS - Specify

④④: Pump Fiber Type
02 - NUFERN MM-S105/125-22A
SS - Specify

⑤⑤: Signal Fiber Type
06 - NUFERN PM-GDF-5/130
S - Specify

⑥⑥: Output Fiber Type
06 - NUFERN PM-GDF-5/130
SS - Specify

⑦: Fiber Length
1.2 - 1.2 m
S - Specify

⑧: Package Type
P1 - 50x5x5
SS - Specify

# PM(2+1)X1 Multi-Mode Pump Combiner 10xxnm 30W

Spec Review No.:SR2205021A Date: May. 16, 2022

**Specifications**

| Parameters | unit | Values |
|---|---|---|
| Pump Wavelength | nm | 976 |
| Signal Wavelength | nm | 1064 |
| Pump Fiber | - | MM-S105/125-22A Fiber |
| Signal Fiber | - | Nufern PLMA-GDF-10/125-M |
| Output Fiber | - | Nufern PLMA-GDF-10/125-M |
| Min.Pump Efficiency | % | 92 |
| Max.Signal Insertion Loss | dB | 0.4 |
| Min.PER (inner core) | dB | 20 |
| Max.Pump Power Handling (each port) | W | 30 |
| Operating Temperature | °C | -5 to 75 |
| Storage Temperature | °C | -40 to 85 |
| Package | mm | 70(L) x12(W) x8(H) |

*Above specifications are for device without connector.

*Port mark with digital labeling

*The material must be RoHS compliant.

**Package Dimensions**

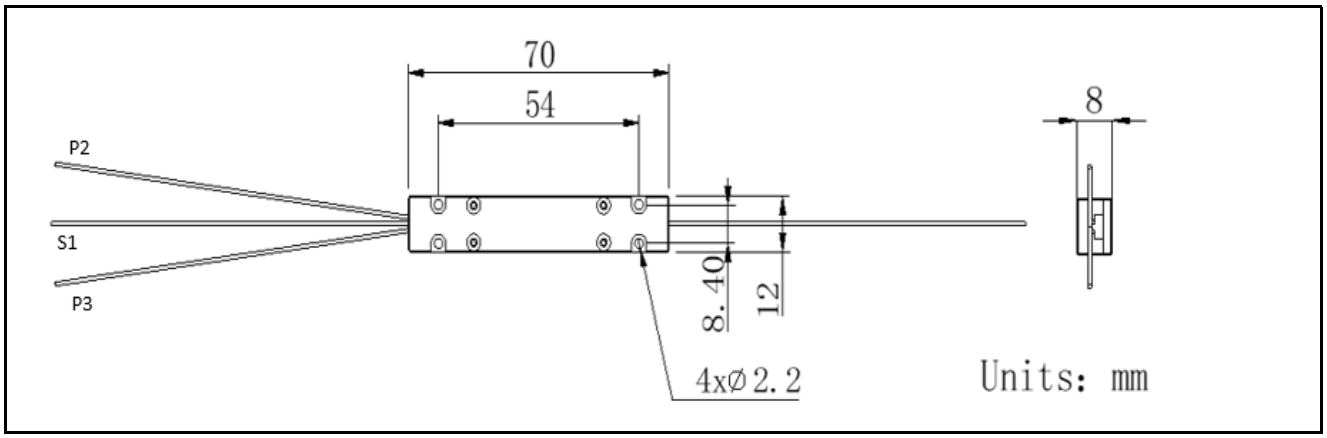


**Ordering Information**

PMMPC-LC-(2+1)X1-①-②②-③③③-④④-⑤⑤-⑥⑥-⑦-⑧⑧-⑨

①:Pump propagation direction
F- Forward
S - Specify

④④:Pump fiber type
02- MM-S105/125-0.22NA Fiber
SS - Specify

⑦:Fiber Length
0.8- 0.8m
S - Specify

②②:Signal Wavelength
06- 1064nm
SS - Specify

⑤⑤:Signal fiber type
04- Nufern PLMA-GDF-10/125-M
SS - Specify

⑧⑧Pump handling Power
10-10W
S - Specify

③③③:Pump Wavelength
976- 976nm
SSS - Specify

⑥⑥:Output fiber type
04- Nufern PLMA-GDF-10/125-M
SS - Specify

⑨:Pcakage Type
P2- 70(L) x12(W) x8(H)
S - Specify

# Polarization Maintaining (2+1)X1 MultiMode Pump & Signal Combiner 10xxnm 70W

Spec Review No:SR2501036A Date: Jan. 14, 2025

**Specifications**

| Parameters | Unit | Values |
|---|---|---|
| Pump Wavelength | nm | 976 |
| Signal Wavelength | nm | 1064 |
| Pump Fiber | - | NUFERN MM-S105/125-22A |
| Signal Fiber | - | Nufern PLMA-GDF-10/125-M |
| Output Fiber | - | PLMA-GDF-25/250-M |
| Min. Pump Efficiency | % | 92 |
| Max. Signal Insertion Loss | dB | 0.7 |
| Min. PER @23°C | dB | 18 |
| Pump Power Handling(Each Port) | W | 70 |
| Operating Temperature | °C | -5 to 75 |
| Storage Temperature | °C | -40 to 85 |
| Package | mm | 70(L)X12(W)X8(H) |

*Above specifications are for device without connector.

*Port mark with digital labeling

*The material must be RoHS compliant.

**Package Dimensions**

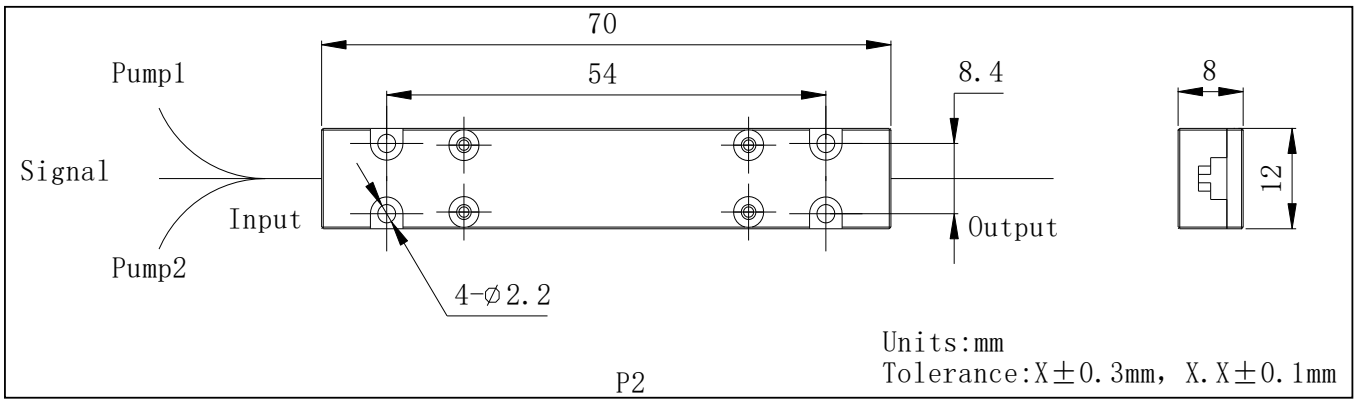


**Ordering Information**

PMMPC-LC-(2+1)X1-①-②②②-③③③③-④④-⑤⑤-⑥⑥-⑦-⑧

①: Pump Propagation Direction
F- Forward
S - Specify

④④: Pump Fiber Type
02- NUFERN MM-S105/125-22A
SS - Specify

⑦: Fiber Length
1- 1 m
S - Specify

②②②: Pump Wavelength
976 - 976nm
SSS - Specify

⑤⑤: Signal Fiber Type
04 - Nufern PLMA-GDF-10/125-M
SS - Specify

⑧: Package Type
P2- 70X12X8
S - Specify

③③③③: Signal Wavelength
1064 - 1064nm
SSSS - Specify

⑥⑥: Output Fiber Type
13 - PLMA-GDF-25/250-M
SS - Specify

# Polarization Maintaining (6+1)X1 Multimode Pump & Signal Combiner 10xxnm 50W

Spec Review No.:SR2306054A Date:Jun, 16, 2023

## Specifications

| Parameters | Unit | Values |
|---|---|---|
| Pump Wavelength | nm | 976 |
| Signal Wavelength | nm | 1030 |
| Pump Fiber | - | MM-S105/125 NA0.22 |
| Signal Input Fiber | - | PLMA-GDF-15/130 NA0.08 |
| Output Fiber | - | PLMA-GDF-15/130 NA0.08 |
| Min. Pump Efficiency | % | 93 |
| Max. Signal Insertion Loss (Input to Output) | dB | 0.8 |
| Min. PER | dB | 17 |
| Max. Pump Power Handling (Per Port) | W | 50 |
| Operating Temperature | °C | -5 to 75 |
| Storage Temperature | °C | -40 to 85 |
| Package | mm | 70(L) x12(W) x8(H) |

*Above specifications are for device without connector.

*Port mark with digital labeling

*The material must be RoHS compliant.

## Package Dimensions

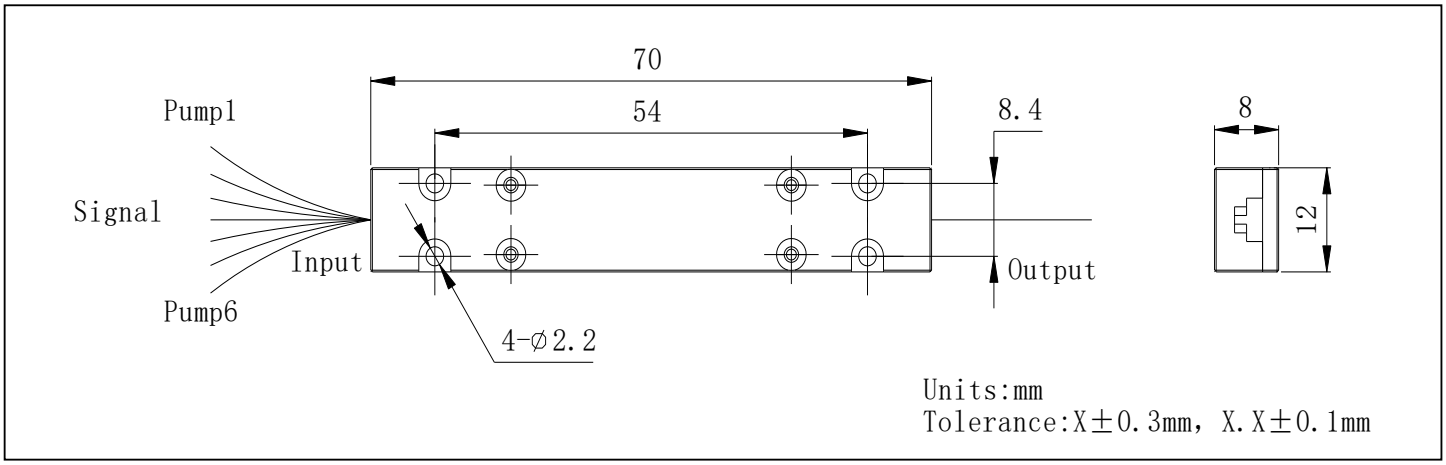


## Ordering Information

**PMMPC-LC-(6+1)X1-①-②②②②-③③③-④④-⑤⑤-⑥⑥-⑦-⑧**

①: Pump Propagation Direction
F - Forward
S - Specify

②②②②: Signal Wavelength
1030 - 1030nm
SS - Specify

③③③: Pump Wavelength
976 - 976nm
SSS - Specify

④④: Pump Fiber Type
02 - MM-S105/125 NA0.22
SS - Specify

⑤⑤: Signal Fiber Type
14 - PLMA-GDF-15/130 NA0.08
SS - Specify

⑥⑥: Output Fiber Type
14 - PLMA-GDF-15/130 NA0.08
SS - Specify

⑦: Fiber Length
1 - 1m
S - Specify

⑧: Package Type
P2- 70x12x8
S - Specify

# Polarization Maintaining (6+1)X1 MultiMode Pump & Signal Combiner 10xxnm 70W

Spec Review No.:SR2303048A Date: Mar. 18, 2023

**Specifications**

| Parameters | Unit | Values |
|---|---|---|
| Pump Wavelength | nm | 976 |
| Signal Wavelength | nm | 1080 |
| Pump Fiber | - | MM-S105/125-22A |
| Signal Fiber | - | PLMA-GDF-10/125 |
| Output Fiber | - | PLMA-GDF-25/250 |
| Min.Pump Efficiency | % | 95 |
| Max.Signal Insertion | dB | 0.8 |
| Min.PER | dB | 17 |
| Max. Pump Power Handling(Each port) | W | 65 |
| Operating Temperature | °C | -5 to 75 |
| Storage Temperature | °C | -40 to 85 |
| Package | mm | 100(L) x15(W) x10(H) |

*Above specifications are for device without connector.

*Port mark with digital labeling

*The material must be RoHS compliant.

**Package Dimensions**

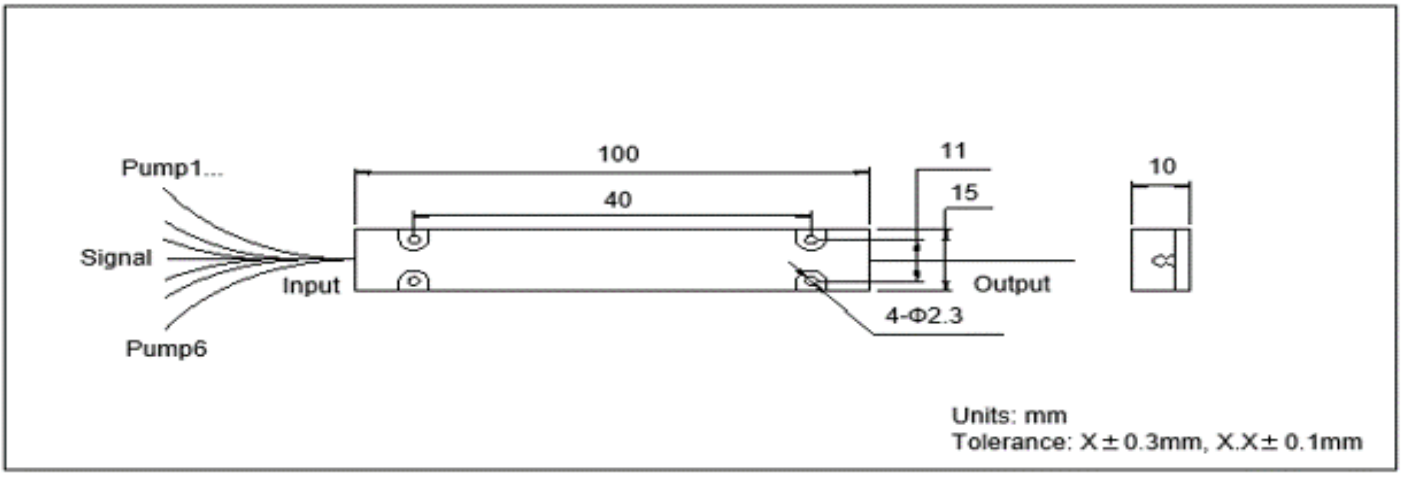


**Ordering Information**

PMMPC-LC-(6+1)X1-①-②②-③③③-④④-⑤⑤-⑥⑥-⑦-⑧

①: Pump Propagation Direction
F - Forward

②②②②: Signal Wavelength
1080 - 1080nm

③③③: Pump Wavelength
976 - 976nm

④④: Pump Fiber Type
02 - MM-S105/125-0.22NA

⑤⑤: Signal Fiber Type
04 - PLMA-GDF-10/125

⑥⑥: Output Fiber Type
13 - PLMA-GDF-25/250

⑦: Fiber Length
0.8 - 0.8m

⑧: Package Type
P3 - 100(L) x15(W) x10(H)

# Polarization Maintaining (6+1)X1 Multi-Mode Pump Combiner 10xxnm 240W

Spec Review No.:SR2303041B Date: Mar, 15, 2023

**Specifications**

| Parameters | unit | Values |
|---|---|---|
| Pump Wavelength | nm | 976 |
| Signal Wavelength | nm | 1060 |
| Pump Fibers | - | MM-S135/155-22A |
| Signal Input Fiber | - | PLMA-GDF-20/400-M |
| Signal Output Fiber | - | PLMA-GDF-20/400-M |
| Max. Handling Power (Pump Ports) | W | 240 |
| Maximum Handling Hower For Singal Port | W | 200 |
| Min. Pump Efficiency | % | 96 |
| Min.PER | dB | 18 |
| Max. Signal Insertion Loss | dB | 0.2 |
| Operating Temperature | °C | -5 to 75 |
| Storage Temperature | °C | -40 to 85 |
| Package | mm | 150(L) x15(W) x12.6(H) |

*Above specifications are for device without connector.

*Ports marked with digital label.

*The material must be RoHS compliant.

**Package Dimensions**

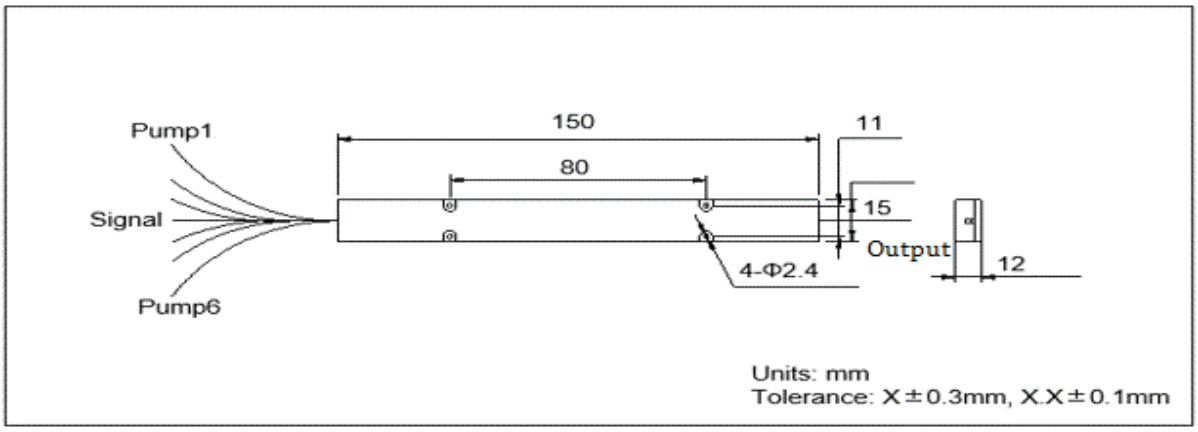


**Ordering Information**

**PMMPC-LC-(6+1)X1**-①-②②②②-③③③-④④-⑤⑤-⑥⑥-⑦-⑧⑧⑧-⑨

①: Pump Propagation Direction
F - Forward
S - Specify

④④: Pump Fiber Type
19 - MM-S135/155-22A
SS - Specify

⑦: Fiber Length
1 - 1 m
S - Specify

②②②②: Signal Wavelength
1060 - 1060nm
SSSS - Specify

⑤⑤: Signal Fiber Type
64 - PLMA-GDF-20/400-M
SS - Specify

⑧: Package Type
P4 - 150(L) x15(W) x12.6(H)
SS - Specify

③③③: Pump Wavelength
976 - 976nm
SSS - Specify

⑥⑥:Output Fiber Type
64 - PLMA-GDF-20/400-M
SS - Specify

# Polarization Maintaining (1+1)X1 MultiMode Pump & Signal Combiner 15xxnm 10W

Spec Review No.: SR2209058B Date: Sep. 05, 2024

## Specifications

| Parameters | Unit | Values |
|---|---|---|
| Pump Wavelength | nm | 976 |
| Signal Wavelength | nm | 1550 |
| Pump Fiber | - | NUFERN MM-S105/125-22A |
| Signal Input Fiber | - | Fujikura-SM15-PS-U25D |
| Signal Output Fiber | - | NUFERN PM-GDF-1550 |
| Min. Pump Efficiency | % | 90 |
| Max. Signal Insertion Loss (Input to Output) | dB | 0.5 |
| Min. PER (Inner Core) | dB | 18 |
| Max. Pump Power Handling (Each Port) | W | 10 |
| Package | mm | 50(L) x5(W) x5(H) |
| Operating Temperature | °C | -5 to 75 |
| Storage Temperature | °C | -40 to 85 |

*Above specifications are for device without connector.

*Port mark with digital labeling

*The material must be RoHS compliant.

## Package Dimensions

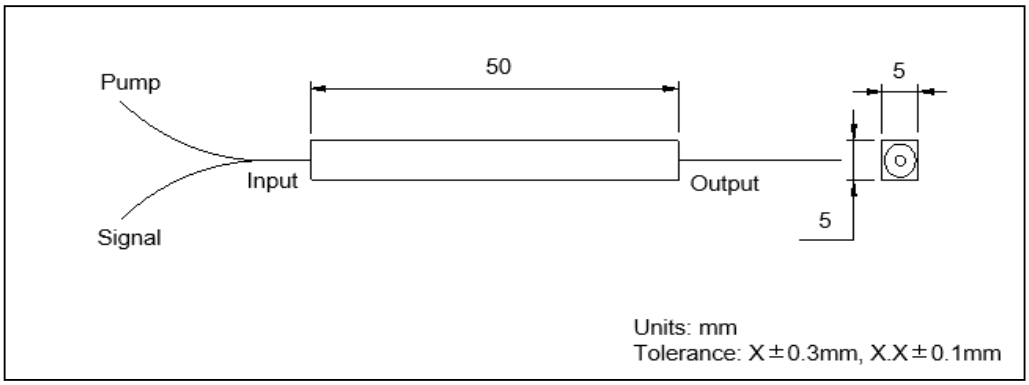


## Ordering Information

**PMMPC-LC**-(1+1)X1-①-②②②②-③③③③-④④-⑤⑤-⑥⑥-⑦

①:Pump Propagation Direction
F - Forward
S - Specify

②②②:Pump Wavelength
976 - 976nm
SSS - Specify

③③③③:Signal Wavelength
1550 - 1550nm
SS - Specify

④④:Pump Fiber Type
02 - NUFERN MM-S105/125-22A
SS - Specify

⑤⑤:Signal Fiber Type
30 - Fujikura-SM15-PS-U25D
SS - Specify

⑥⑥:Output Fiber Type
52 - NUFERN PM-GDF-1550
SS - Specify

⑦: Fiber Length
1 - 1.0m

⑧: Package Type
P1 - 50X5X5
S - Specify

# Polarization Maintaining (2+1)X1 MultiMode Pump &Signal Combiner 15xxnm 50W

Spec Review No.:SR2503023A Date: Mar. 7, 2025

## Specifications

| Parameters | | Unit | Values |
|---|---|---|---|
| Pump Wavelength | | nm | 976 |
| Signal Wavelength | | nm | 1550 |
| Fiber Type | Pump Fiber | - | NUFERN MM-S105/125-22A |
| | Signal Input Fiber | - | NUFERN PM-GDF-1550 |
| | Output Fiber | - | NUFERN PM-GDF-1550 |
| Min.Pump Efficiency | | % | 93 |
| Max.Signal Insertion Loss | | dB | 0.5 |
| Max.Pump Power Handling (Per port) | | W | 30 |
| Max.Signal Power Handling | | W | 12 |
| Min. PER (Inner Core) @23℃ | | dB | 20 |
| Operating Temperature | | °C | -5 to 75 |
| Storage Temperature | | °C | -40 to 85 |
| Package | | mm | 70(L) x12(W) x8(H) |

*Above specifications are for device without connector.

*Port mark with digital labeling

*The material must be RoHS compliant.

## Package Dimensions

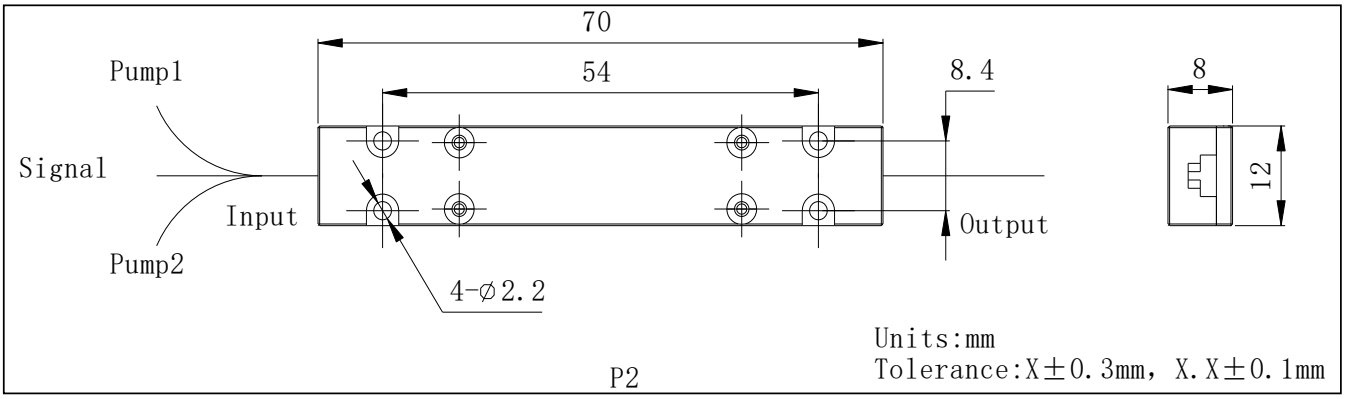


## Ordering Information

PMMPC-LC-(2+1)X1-①-②②②-③③③③-④④-⑤⑤-⑥⑥-⑦-⑧

①: Pump Propagation Direction
F - Forward
S - Specify

②②②:Pump Wavelength
976 - 976nm
SSS - Specify

③③③③: Signal Wavelength
1550 - 1550nm
SSSS - Specify

④④: Pump Fiber Type
02 - NUFERN MM-S105/125-22A
SS - Specify

⑤⑤: Signal Fiber Type
52 - NUFERN PM-GDF-1550
S - Specify

⑥⑥: Output Fiber Type
52 - NUFERN PM-GDF-1550
SS - Specify

⑦: Fiber Length
1 - 1 m
S - Specify

⑧: Package Type
P2 - 70x12x8
SS - Specify

Form No.: D05-203-05 Rev.B

# Polarization Maintaining (6+1)X1 MultiMode Pump & Signal Combiner 15xxnm 30W

Spec Review No.:SR2502048A Date: Feb. 24, 2025

## Specifications

| Parameters | Unit | Values |
|---|---|---|
| Pump Wavelength | nm | 950 |
| Signal Wavelength | nm | 1550 |
| Pump Fiber | - | MM-S105/125-22A |
| Signal Input Fiber | - | NUFERN PM-GDF-1550 |
| Signal Output Fiber | - | NUFERN PM-GDF-1550 |
| Min.Pump Efficiency | % | 93 |
| Max.Signal Insertion Loss (Input to Output) | dB | 1.5 |
| Min.PER (Inner Core) @23°C | dB | 18 |
| Max.Pump Power Handling (Per Port) | W | 30 |
| Package | mm | 70X12X8 |
| Operating Temperature | °C | -5 to 75 |
| Storage Temperature | °C | -40 to 85 |

*Above specifications are for device without connector.

*Port mark with digital labeling

*The material must be RoHS compliant.

## Package Dimensions

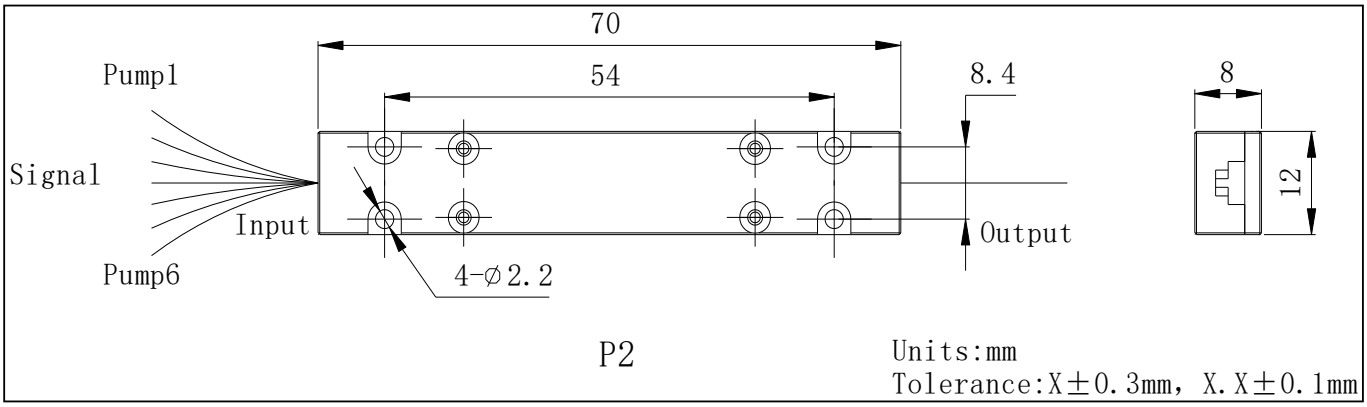


## Ordering Information

PMMPC-LC-(6+1)X1-①-②②②②-③③③-④④-⑤⑤-⑥⑥-⑦-⑧

①:Pump Propagation Direction
F- Forward
S - Specify

②②②:Pump Wavelength
915- 915nm, 950- 950nm
SSS - Specify

③③③③:Signal Wavelength
1550- 1550nm
SS - Specify

④④:Pump Fiber Type
02- MM-S105/125-22A
SS - Specify

⑤⑤:Signal Input Fiber
52- NUFERN PM-GDF-1550
SS - Specify

⑥⑥:Signal Output Fiber
52- NUFERN PM-GDF-1550
SS - Specify

⑦:Fiber Length
1- 1m
S - Specify

⑧:Package Type
P2- 70x12x8
S - Specify

# Polarization Maintaining (1+1)X1 Multimode Pump & Signal Combiner 19xx~20xxnm 10W

Spec Review No.: SR2408017A Date: Aug. 08, 2024

## Specifications

| Parameters | Unit | Values |
|---|---|---|
| Pump Wavelength | nm | 793 |
| Signal Wavelength | nm | 1950 |
| Pump Fiber | - | NUFERN MM-S105/125-22A |
| Signal Input Fiber | - | PM1950 |
| Output Fiber | - | PM-GDF-10/130-2000-M |
| Min. Pump Efficiency | % | 92 |
| Max. Signal Insertion Loss (Input to Output) | dB | 0.5 |
| Min. Extinction Ratio | dB | 18 |
| Max. Pump Power Handling (Per Pump) | W | 10 |
| Operating Temperature | ℃ | -5 to +75 |
| Storage Temperature | ℃ | -40 to +85 |
| Package | mm | 70X12X8 |

*Above specifications are for device without connector.

*Port mark with digital labeling

*The material must be RoHS compliant.

## Package Dimensions

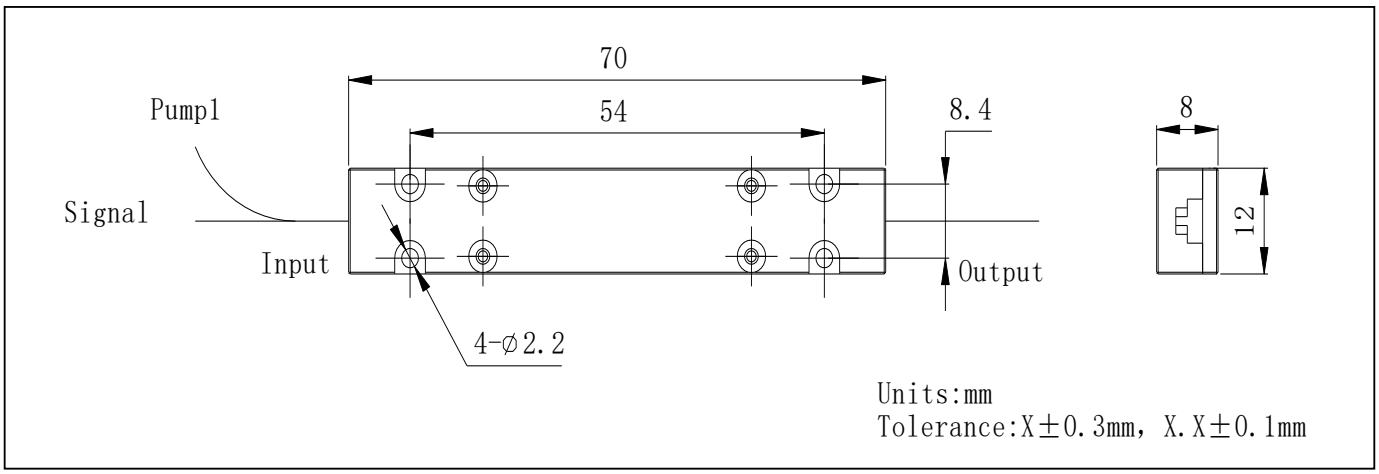


## Ordering Information

PMMPC-LC-(1+1)X1-①-②②②-③③③③-④④-⑤⑤⑤-⑥⑥⑥-⑦-⑧

①: Pump Propagation Direction

F - Forward

②②②: Pump Wavelength

793 - 793nm

③③③③: Signal Wavelength

1950 - 1950nm

④④: Pump Fiber Type

02 - NUFERN MM-S105/125-22A

⑤⑤⑤: Signal Fiber Type

156 - PM1950

⑥⑥⑥: Output Fiber Type

157 - PM-GDF-10/130-2000-M

⑦: Fiber Length

1 - 1.0m

S - Specify

⑧: Package Type

P2 - 70x12x8

Form No.: D05-203-05 Rev.B

# Polarization Maintaining (2+1)X1 Multimode Pump & Signal Combiner 19xx~20xxnm 30W

Spec Review No.:SR2405011A Date: May. 09, 2024

## Specifications

| Parameters | Unit | Values |
|---|---|---|
| Pump Wavelength | nm | 793 |
| Signal Wavelength | nm | 2050 (Test at 1985) |
| Pump Fiber | - | MM-S105/125-22A |
| Signal Input Fiber | - | PM-GDF-10/130-2000-M |
| Output Fiber | - | PM-GDF-10/130-2000-M |
| Min. Pump Efficiency | % | 92 |
| Max. Signal Insertion Loss (Input to Output) | dB | 0.5 |
| Min. Extinction Ratio | dB | 17 |
| Max. Signal Power Handling | - | AVG: 5W; Peak: 500W |
| Max. Pump Power Handling (Per Port) | W | 30 |
| Operating Temperature | ℃ | -5 to 75 |
| Storage Temperature | ℃ | -40 to 85 |
| Package | mm | 70(L) x12(W) x8(H) |

*Above specifications are for device without connector.

*Port mark with digital labeling

*The material must be RoHS compliant.

## Package Dimensions

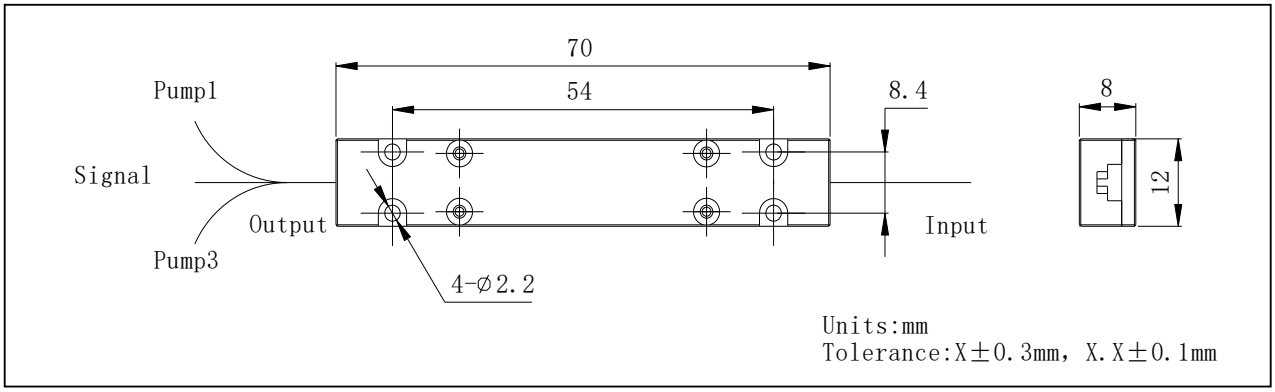


## Ordering Information

**PMMPC-LC-(2+1)X1-①-②②②-③③③③-④④-⑤⑤⑤-⑥⑥⑥-⑦-⑧**

①: Pump Propagation Direction
F- Forward

②②②: Pump Wavelength
793- 793nm

③③③③: Signal Wavelength
2050- 2050nm

④④: Pump Fiber Type
02- MM-S105/125-22A

⑤⑤⑤: Signal Fiber Type
157- PM-GDF-10/130-2000-M

⑥⑥⑥: Output Fiber Type
157- PM-GDF-10/130-2000-M

⑦: Fiber Length
1- 1.0m
S - Specify

⑧: Package Type
P2 - 70(L) x12(W) x8(H)

# Polarization Maintaining (6+1)X1 Multimode Pump & Signal Combiner 19xx~20xxnm 30W

Spec Review No.:SR2305051A Date: May. 15, 2023

## Specifications

| Parameters | Unit | Values |
|---|---|---|
| Pump Wavelength | nm | 793 |
| Signal Wavelength | nm | 1900~2100 |
| Pump Fiber | - | MM-S105/125-22A |
| Signal Input Fiber | - | PM-GDF-10/130-2000-M |
| Output Fiber | - | PM-GDF-10/130-2000-M |
| Min. Pump Efficiency | % | 92 |
| Max. Signal Insertion Loss (Input to Output) | dB | 1.5 |
| Min, PRE | dB | 17 |
| Max. Pump Power Handling (Per Port) | W | 100 |
| Operating Temperature | °C | -5 to 75 |
| Storage Temperature | °C | -40 to 85 |
| Package | mm | 70(L) x12(W) x8(H) |

*Above specifications are for device without connector.

*Port mark with digital labeling

*The material must be RoHS compliant.

## Package Dimensions

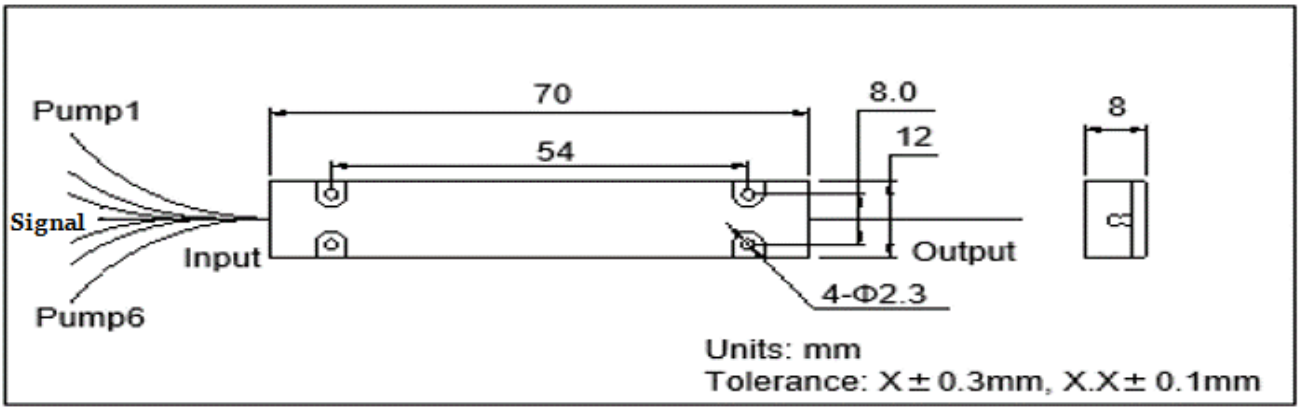


## Ordering Information

**PMMPC-LC-(6+1)X1-①-②②②②-③③③-④④-⑤⑤⑤-⑥⑥⑥-⑦-⑧**

①: Pump Propagation Direction
F- Forward
S - Specify

④④: Pump Fiber Type
02- MM-S105/125-22A
SS - Specify

⑦: Fiber Length
1- 1m
S - Specify

②②②②: Signal Wavelength
2000- 1900~2100nm
SSSS - Specify

⑤⑤⑤: Signal Fiber Type
157- PM-GDF-10/130-2000-M
SSS - Specify

⑧: Package Type
P2- 70x12x8
SS - Specify

③③③: Pump Wavelength
793- 793nm
SSS - Specify

⑥⑥⑥: Output Fiber Type
157- PM-GDF-10/130-2000-M
SSS - Specify

# 3X1 Multi-Mode Pump Combiner 100W

Spec Review No.:SR2210021A Date:Jul. 11, 2022

**Specifications**

| Parameters | Unit | Values |
|---|---|---|
| Pump Wavelength | nm | 976 |
| Pump Fibers | - | YOFC SI 135/155-22/320(DC) |
| Output Fiber | - | PTIU220/242/325FA22 |
| Max. Pump Power Handling(Each port) | W | 250 |
| Min.Pump Efficiency | % | 95 |
| Typ.Pump Efficiency | % | 96 |
| Operating Temperature | °C | -5 to 75 |
| Storage Temperature | °C | -40 to 85 |
| Package | mm | 100(L) x15(W) x10(H) |

*Above specifications are for device without connector.

*The material must be RoHS compliant.

**Package Dimensions**

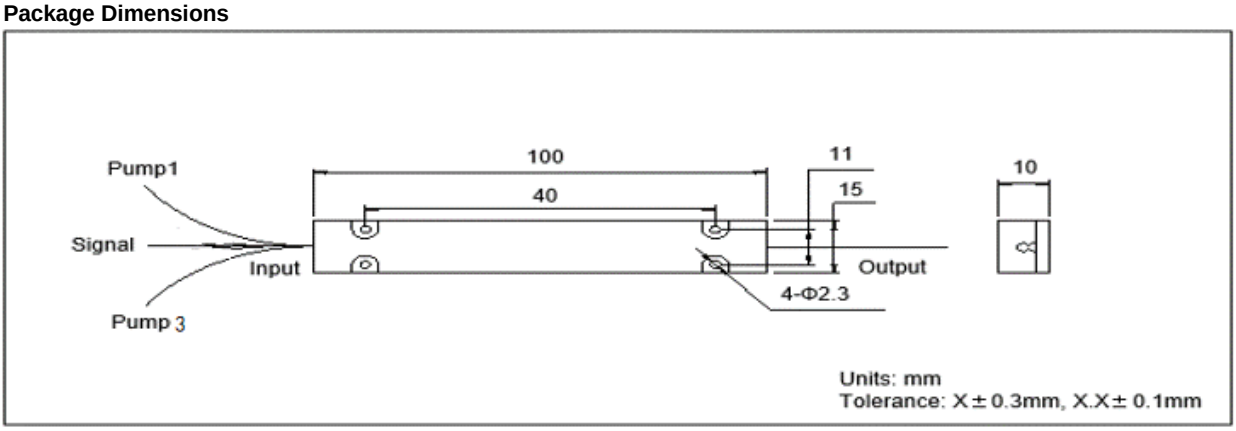


**Ordering Information**

MMPC-LC-3X1-①①-②②-③-④

①①: Pump Fiber Type

77 - YOFC SI 135/155-22/320(DC)

SS - Specify

③:Fiber Length

1- 1m

S - Specify

②②:Output Fiber Type

78 - PTIU220/242/325FA22

SS - Specify

④:Package Type

P3 - 100 x15 x10

S - Specify

Form No.: D05-203-05 Rev.B

# 7X1 Multi-Mode Pump Combiner 100W

Spec Review No.:SR2211009A Date:Apr. 11, 2022

**Specifications**

| Parameters | Unit | Values |
|---|---|---|
| Pump Wavelength | nm | 976 |
| Pump Fibers | - | MM-S105/125-0.22A |
| Output Fiber | - | MM-S220/242-22A |
| Handling Power (Pump Ports) | W | 100 |
| Min.Pump Efficiency | % | 95 |
| Typ.Pump Efficiency | % | 96 |
| Operating Temperature | °C | -5 to 75 |
| Storage Temperature | °C | -40 to 85 |
| Package | mm | 100(L) x15(W) x10(H) |

*Above specifications are for device without connector.

*The material must be RoHS compliant.

**Package Dimensions**

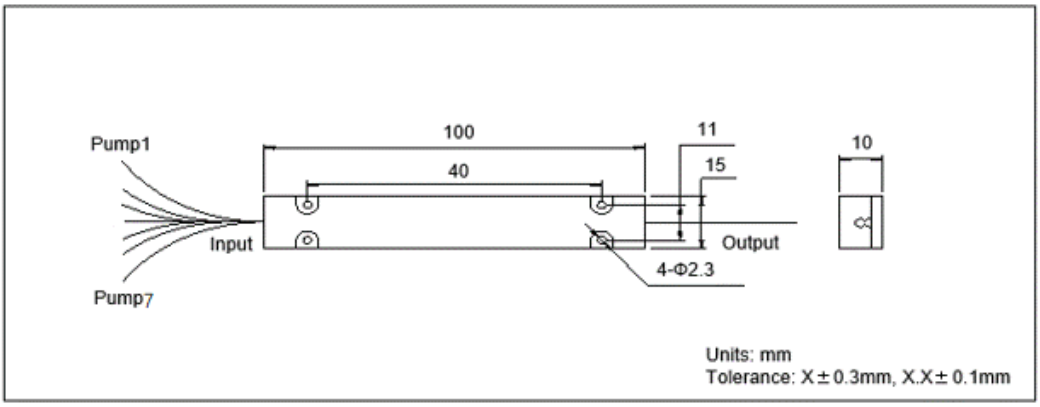


**Ordering Information**

**MMPC-LC-7X1**-①①-②②-③-④

①①: Pump Fiber Type
2 - MM- S105/125-0.22A
SS - Specify

②②: Output Fiber Type
78 - MM-S220/242-22A
SS - Specify

③: Fiber Length
1.2 - 1.2m
S - Specify

④: Package Type
P3 - 100 x15 x10
S - Specify

# Single Mode Filter Coupler 7xx~8xxnm 300mW

Spec Review No.: SR1407001C Date: Jul. 29, 2024

## Specifications

| Parameters | Unit | Values | |
|---|---|---|---|
| Center Wavelength | nm | 850 | |
| Operating Wavelength Range | nm | ±40 | |
| Port Type | - | 1x2 | 2x2 |
| Max. Excess Loss | dB | 1.4 | 1.8 |
| Max. Uniformity (only for 50/50) | dB | 1.0 | 1.2 |
| Tap Ratio (Port 2/4) | - | 5±1.0% and 50% | |
| Min. Return Loss | dB | 50 | |
| Max. PDL | dB | 0.15 | |
| Max. Optical Power (CW,Total) | mW | 200 | |
| Max. Tensile Load | N | 5 | |
| Fiber Type | - | HI 780 fiber | |
| Operating Temperature | ℃ | -5 to +70 | |
| Storage Temperature | ℃ | -40 to +85 | |

* Above specifications are for devices without the connectors.

* For devices with connectors, IL will be 0.7dB higher, RL will be 5dB lower.lower.

*The material must be RoHS compliant.

## Package Dimensions

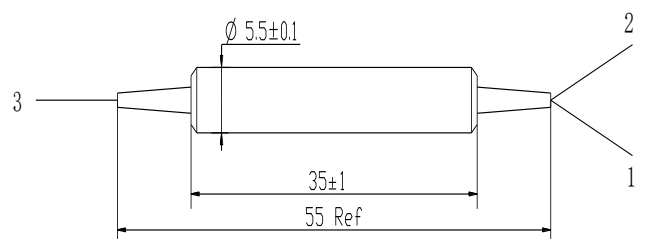


Optical Path:Port 1 to Port2/3,Port 2 is Tap Port

Unit:mm

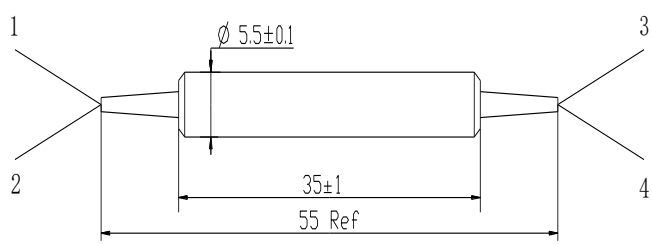


Optical Path:Port 1 to Port2/3,Port 2 is Tap Port
Port 3 to Port1/4,Port 4 is Tap Port

Unit:mm

## Ordering Information

**SMFC-①①-②-③③-④-⑤⑤⑤⑤-⑥⑥⑥⑥-⑦-⑧⑧-⑨⑨**

①①: Wavelength
85 - 850nm
SS - Specify

②: Port
1 - 1x2
2 - 2x2

③③: Coupling Ratio
5 - 5/95
50 - 50/50
SS - Specify

④:Handling Power
0.2 - 200mW
S - Specify

⑤⑤⑤⑤: Connector Type on Port 1, 2, 3 & 4
1G - FC/UPC
2G - FC/APC
3D - SC/UPC
4D - SC/APC
N - None
SSSS - Specify

⑥⑥⑥⑥: Fiber Jacket on Port 1, 2, 3 & 4
B - 250um Fiber
F - 900um Loose Tube(White)
SSSS - Specify

⑦: Fiber Length
0.8 - 0.8m
S - Specify

⑧⑧: Fiber Type
09 - HI 780 Fiber
SS - Specify

⑨⑨: Package Type
01 - Ø5.5x35

# Single Mode Filter Coupler 9xx~19xxnm 500mW~10W

Spec No.: CAT-10-028B Date:

## Specifications

| Parameters | Unit | Values | | | |
|---|---|---|---|---|---|
| Center Wavelength | nm | 1064 | | 1310 or 1550 | |
| Operating Wavelength Range | nm | ±40 | | | |
| Type | | 1x2 | 2x2 | 1x2 | 2x2 |
| Max. Excess Loss | dB | 1.0 | 1.4 | 0.8 | 1.0 |
| Max. Uniformity (only for 50/50) | dB | 0.7 | 1.0 | 0.6 | 0.8 |
| Tap Ratio (Port 2/4) | % | 0.1±0.05%,1±0.2%, 2±0.4%, 5±1.0%, 10±2.0%, and 50% | | | |
| Min. Return Loss | dB | 50 | | | |
| Max. PDL | dB | 0.1,0.25 for Tap Ratio＜5% | | | |
| Max. Optical Power (CW) | mW | 300 | | | |
| Max. Tensile Load | N | 5 | | | |
| Fiber Type | | HI 1060 fiber | | SMF-28e | |
| Operating Temperature | ℃ | -5 to +70 | | | |
| Storage Temperature | ℃ | -40 to +85 | | | |

* Above specifications are for devices without the connectors.

* For devices with connectors, IL will be 0.5dB higher(1064nm),IL will be 0.3dB higher(1310nm&1550nm), RL will be 5dB lower.

*The material must be RoHS compliant.

## Package Dimensions

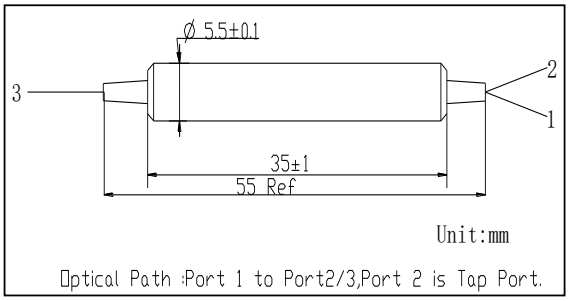


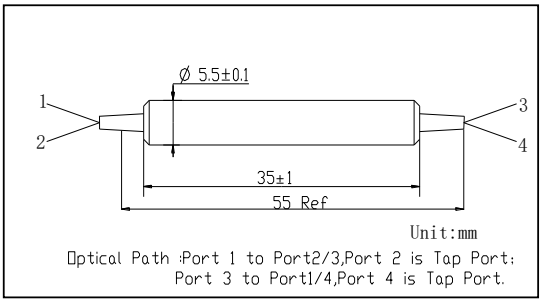


## Ordering Information

**SMFC-**①①-②-③③-④-⑤⑤⑤⑤-⑥⑥⑥⑥-⑦-⑧⑧-⑨⑨

①①: Wavelength
06 - 1060nm
31 - 1310nm
55 - 1550nm
SS - Specify

②: Port
1 - 1x2
2 - 2x2

③③: Coupling Ratio
05 - 5/95
50 - 50/50
SS - Specify

④:Handling Power
0.3 - 300mW
S - Specify

⑤⑤⑤⑤: Connector Type on Port 1, 2, 3 &
1B - FC/UPC
2B - FC/APC
3D - SC/UPC
4D - SC/APC
N - None
S - Specify

⑥⑥⑥⑥: Fiber Jacket on Port 1, 2, 3 & 4
B - 250um Fiber
F - 900um Loose Tube(White)
G - 900um Loose Tube(Yellow)
E - 900um Loose Tube(Black)
S - Specify

⑦: Fiber Length
0.8 - 0.8m
S - Specify

⑧⑧:Fiber Type
01 - HI-1060 Fiber
02 - SMF-28e Fiber
S - Specify

⑨⑨ Package Type
01 - Ø5.5x35

# Polarization Maintaining Filter Coupler 10xxnm 500mW 2x2

Spec No.: CAT-09-017C Date:

**Specifications**

| Parameters | Unit | Values |
|---|---|---|
| Center Wavelength | nm | 1030, 1064 |
| Operating Wavelength Range | nm | ± 20 |
| Coupling Ratio (for Port 2 & 4 only) | % | 1±0.2, 2±0.4, 5±1.0, 10 & 50 |
| Min. Return Loss | dB | 50 |
| Min. Extintion Ratio (only for F Type) | dB | 20 |
| Min. Extintion Ratio (only for B Type) | dB | 18 |
| Max. Excess Loss | dB | 1.2 |
| Max. Uniformity (for 50/50 only) | dB | 0.8 |
| Max. Optical Power (CW) | mW | 300 |
| Max. Tensile Load | N | 5 |
| Fiber Type | – | PM Panda Fiber |
| Operating Temperature | ℃ | -5 to +70 |
| Storage Temperature | ℃ | -40 to +85 |

*Above specification are for devices without connector.

*For devices with connectors, IL will be 0.3dB higher, RL will be 5dB lower, ER will be 2dB lower.

*The PM fiber and the connector key are aligned to the slow axis.

*The material must be RoHS compliant.

**Package Dimensions**

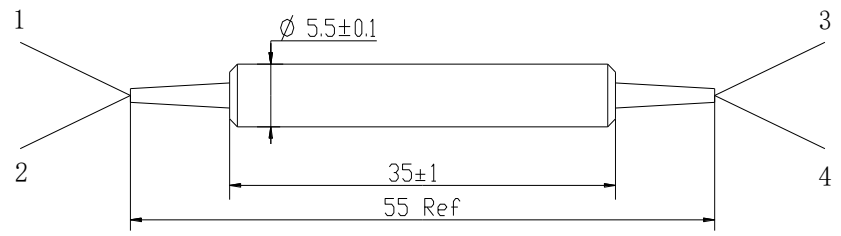


Optical Path of B Type:Port 1 to Port2/3,Port 2 is Tap Port
Port 3 to Port1/4,Port 4 is Tap Port
Optical Path of F Type:Port 1 to Port3/4,Port 4 is Tap Port
Port 3 to Port1/2,Port 2 is Tap Port

Unit:mm

## Ordering Information

PMFC-①-②-③-④-⑤-⑥⑥⑥⑥-⑦⑦⑦⑦-⑧-⑨-⑩

①: Wavelength
06 - 1064nm
03 - 1030nm
S - Specify

②: Port
2 - 2x2

③: Coupling Ratio
01 - 01/99
02 - 02/98
05 - 05/95
10 - 10/90
50 - 50/50
SS - Specify

④: Axis Alignment
F - Fast Axis Blocked
B - Both Axis Working

⑤: Handling Power
0.3 - 300mW

⑥⑥⑥⑥: Connector Type on Port 1, 2&3
1A - FC/UPC
2A - FC/APC
3D - SC/APC
4D - SC/UPC
N - None
S - Specify

⑦⑦⑦⑦: Fiber Jacket on Port 1, 2&3
B - Bare Fiber
C - 900um Loose Tube(Red)
D - 900um Loose Tube(Blue)
E - 900um Loose Tube(Black)
F - 900um Loose Tube(White)
SS - Specify

⑧: Fiber Length
1 - 1.0m
S - Specify

⑨: Fiber Type
04A - PM 980 Panda Fiber
20A - PM980 on Port1&3，Hi1060 on Port 2&4
S - Specify

⑩: Package Dimensions
01 - Ø5.5x35
S - Specify

# Polarization Maintaining Filter Coupler 10xxnm 500mW 1x2

Spec No.: CAT-09-018D Date:

**Specifications**

| Parameter | Unit | Values |
|---|---|---|
| Center Wavelength | nm | 1030, 1064 |
| Operating Wavelength Range | nm | ± 20 |
| Coupling Ratio (for Port 2 only) | % | 1±0.2, 2±0.4, 5±1.0, 10 & 50 |
| Min. Return Loss | dB | 50 |
| Min. Extinction Ratio (only for B Type) | dB | 20 |
| Min. Extinction Ratio (only for F Type) | dB | 22 |
| Max. Excess Loss | dB | 0.8 |
| Max. Uniformity (for 50/50 only) | dB | 0.5 |
| Max. Optical Power (CW) | mW | 300 |
| Max. Tensile Load | N | 5 |
| Fiber Type | – | PM Panda Fiber |
| Operating Temperature | ℃ | -5 to +70 |
| Storage Temperature | ℃ | -40 to +85 |

*Above specifications are for device without connector.

*For devices with connectors, IL will be 0.3dB higher, RL will be 5dB lower, and ER will be 2dB lower.

*The PM fiber and the connector key are aligned to the slow axis.

*The material must be RoHS compliant.

**Package Dimensions**

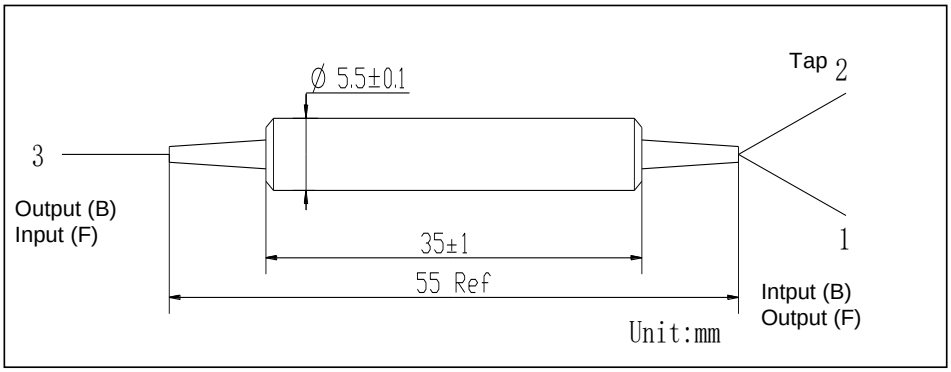


**Ordering Information**

PMFC-①-②-③-④-⑤-⑥⑥⑥-⑦⑦⑦-⑧-⑨-⑩

①: Wavelength
06 - 1064nm
03 - 1030nm
S - Specify

②: Port
1 - 1x2

③: Coupling Ratio
01 - 01/99
02 - 02/98
05 - 05/95
10 - 10/90
50 - 50/50
SS - Specify

④: Axis Alignment
F - Fast Axis Blocked
B - Both Axis Working

⑤: Handling Power
0.3 - 300mW

⑥⑥⑥: Connector Type on Port 1, 2&3
1A - FC/UPC
2A - FC/APC
3D - SC/APC
4D - SC/UPC
N - None
S - Specify

⑦⑦⑦: Fiber Jacket on Port 1, 2&3
B - Bare Fiber
C - 900um Loose Tube(Red)
D - 900um Loose Tube(Blue)
E - 900um Loose Tube(Black)
F - 900um Loose Tube(White)
SS - Specify

⑧: Fiber Length
1 - 1.0m
S - Specify

⑨: Fiber Type
04A - PM 980 Panda Fiber
14A - PM980 on Port1&3，Hi1060 on Port 2
S - Specify

⑩: Package Dimensions
01 - Ø5.5x35
S - Specify

# High Power Polarization Maintaining Filter Coupler 10xxnm 5W

Spec No.: CAT-05-45D Date:

**Specifications**

| Parameter | Unit | Values |
|---|---|---|
| Center Wavelength | nm | 1030, 1064 |
| Operating Wavelength Range | nm | ± 20 |
| Coupling Ratio (for Port 2 only) | % | 1±0.2, 2±0.4, 5±1.0, 10 & 50 |
| Min. Return Loss | dB | 50 |
| Min. Extinction Ratio (only for B Type) | dB | 20 |
| Min. Extinction Ratio (only for F Type) | dB | 22 |
| Max. Excess Loss | dB | 1.0 |
| Max. Uniformity (for 50/50 only) | dB | 0.7 |
| Max. Optical Power (CW) | W | 1, 2, or Specify |
| Max. Peak Power for ns Pulse | kW | 10 |
| Max. Tensile Load | N | 5 |
| Fiber Type | – | PM Panda Fiber |
| Operating Temperature | ℃ | -5 to +70 |
| Storage Temperature | ℃ | -40 to +85 |

*Above specifications are for device without connector.

*For devices with connectors,IL will be 0.3dB higher,RL will be 5dB lower,ER will be 2dB lower and optical power is only 1000mW(CW).

*The PM fiber and the connector key are aligned to the slow axis.

**Package Dimensions**

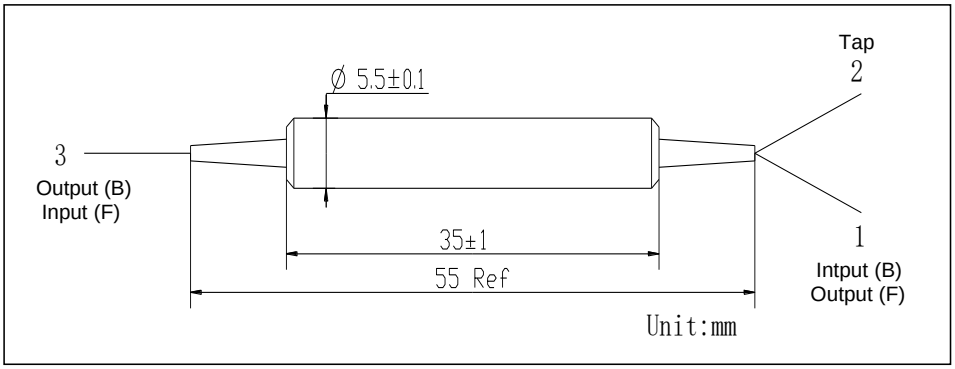


**Ordering Information**

HPMFC-①①-②-③③-④-⑤⑤-⑥⑥⑥-⑦⑦⑦-⑧-⑨⑨-⑩⑩

①①: Wavelength
06 - 1064nm
03 - 1030nm
SS - Specify

②: Port
1 - 1x2

③③: Coupling Ratio
01 - 01/99
02 - 02/98
05 - 05/95
10 - 10/90
50 - 50/50
SS - Specify

④: Axis Alignment
F - Fast Axis Blocked
B - Both Axis Working

⑤⑤: Handling Power
01 - 1W
02 - 2W

⑥⑥⑥: Connector Type on Port 1, 2&3
1A - FC/UPC
2A - FC/APC
3D - SC/APC
4D - SC/UPC
N - None
SS - Specify

⑦⑦⑦: Fiber Jacket on Port 1, 2&3
B - Bare Fiber
C - 900um Loose Tube(Red)
D - 900um Loose Tube(Blue)
E - 900um Loose Tube(Black)
F - 900um Loose Tube(White)
SS - Specify

⑧: Fiber Length
1 - 1.0m
S - Specify

⑨⑨: Fiber Type
04A - PM 980 Panda Fiber
14A - PM980 on Port1&3，Hi1060 on Port 2
S - Specify

⑩⑩: Package Dimensions
01 - Ø5.5x35
SS - Specify

Spec No.: CAT-09-019C Date:

**Specifications**

| Parameters | Unit | Values | |
|---|---|---|---|
| Port Type | - | 1X2 | 2X2 |
| Center Wavelength | nm | 1310 or 1550 | |
| Operating Wavelength Range | nm | ±40 | |
| Max. Excess Loss | dB | 0.7 | 1.0 |
| Max. Uniformity (only for 50/50) | dB | 0.4 | 0.6 |
| Tap Ratio (Port 2/4) | % | 1±0.2, 2±0.4, 5±1.0, 10, and 50 | |
| Min. Return Loss | dB | 50 | |
| Min. Extinction Ratio (only for F type) | dB | 22 | 22 |
| Min. Extinction Ratio (only for B type) | dB | 20 | 18 |
| Max. Tensile Load | N | 5 | |
| Fiber Type | - | SMF-28e or PM Panda Fiber on Tap Port | |
| | | PM Panda Fiber on Port 1 & Port 3 | |
| Operating Temperature | ℃ | -5 to +70 | |
| Storage Temperature | ℃ | -40 to +85 | |

* Above specifications are for devices without the connectors.
* For devices with connectors, IL will be 0.3dB higher, RL will be 5dB lower, and ER will be 2dB lower.
* The PM fiber and the connector key are aligned to the slow axis.
* The material must be RoHS compliant.

**Package Dimensions**

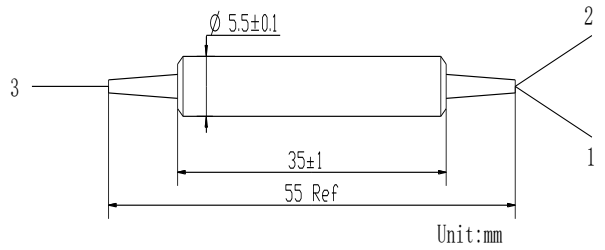


Optical Path of B Type:Port 1 to Port2/3,Port 2 is Tap Port
Optical Path of F Type:Port 3 to Port1/2,Port 2 is Tap Port.

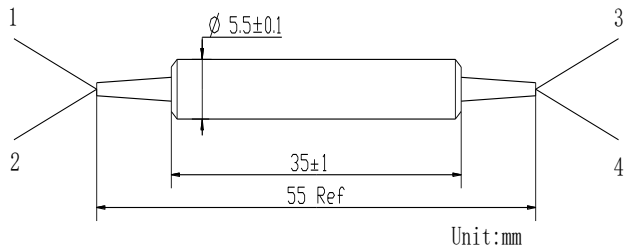


Optical Path of B Type:Port 1 to Port2/3,Port 2 is Tap Port
Port 3 to Port1/4,Port 4 is Tap Port
Optical Path of F Type:Port 1 to Port3/4,Port 4 is Tap Port
Port 3 to Port1/2,Port 2 is Tap Port.

**Ordering Information**

PMFC-①-②-③-④-⑤-⑥⑥⑥⑥-⑦⑦⑦⑦-⑧-⑨-⑩

①: Wavelength
31 - 1310nm
55 - 1550nm
SS - Specify

②: Port
1 - 1x2
2 - 2x2

③: Coupling Ratio
01 - 1/99
10 - 10/90
50 - 50/50
S - Specify

④: Axis Alignment
F - Fast Axis Blocked
B - Both Axis Working

⑤: Handling Power
0.5 - 0.5W (only for Splitter)

⑥⑥⑥⑥: Connector Type on Port 1, 2, 3 & 4
1B - FC/UPC
2B - FC/APC (Step)
3D - SC/UPC
4D - SC/APC
N - None
S - Specify

⑦⑦⑦⑦: Fiber Jacket on Port 1, 2, 3 & 4
B - Bare Fiber
C - 900um Loose Tube(Red)
D - 900um Loose Tube(Blue)
E - 900um Loose Tube(Black)
SS - Specify

⑧: Fiber Length
1 - 1.0m
S - Specify

⑨: Fiber Type
01B - PM1550 Fiber on all Port
07B - PM1310 Fiber on all port
09 - Nufern PM1550-XP Fiber on all Port
13B - PM1550 on Port1 & 3, SMF-28e on Port 2
S - Specify

⑩: Package Dimensions
01 - Ø5.5x35
S - Specify

Spec No.: CAT-05-046C Date:

**Specifications**

| Parameters | Unit | Values | |
|---|---|---|---|
| Port Type | | 1X2 | 2X2 |
| Center Wavelength | nm | 1310 or 1550 | |
| Operating Wavelength Range | nm | ±40 | |
| Max. Excess Loss | dB | 0.9 | 1.2 |
| Max. Uniformity (only for 50/50) | dB | 0.6 | 0.8 |
| Tap Ratio (Port 2/4) | % | 1±0.2, 2±0.4, 5±1.0, 10 & 50 | |
| Min. Return Loss | dB | 50 | |
| Min. Extinction Ratio (only for F type) | dB | 22 | 22 |
| Min. Extinction Ratio (only for B type) | dB | 20 | 18 |
| Max. Optical Power (CW) | W | 1, 2 or Specify (only for Splitter) | |
| Max. Peak Power for ns Pulse | kW | 10 | |
| Max. Tensile Load | N | 5 | |
| Fiber Type | | SMF-28e or PM Panda Fiber on Tap Port | |
| | | PM Panda Fiber on Port 1 & Port 3 | |
| Operating Temperature | ℃ | -5 to +70 | |
| Storage Temperature | ℃ | -40 to +85 | |

* Above specifications are for devices without the connectors.

* For devices with connectors, IL will be 0.3dB higher, RL will be 5dB lower, ER will be 2dB lower and optical power is only 1000mW(CW).

*The PM fiber and the connector key are aligned to the slow axis. And for F type, fast axis is blocked.

* The material must be RoHS compliant.

**Package Dimensions**

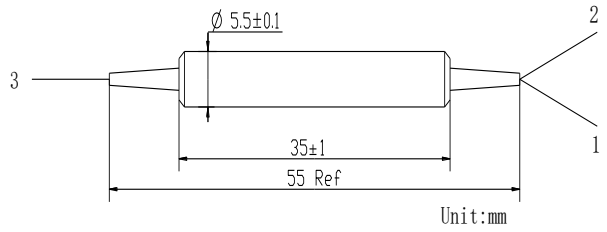


Optical Path of B Type:Port 1 to Port2/3,Port 2 is Tap Port；
Optical Path of F Type:Port 3 to Port1/2,Port 2 is Tap Port.

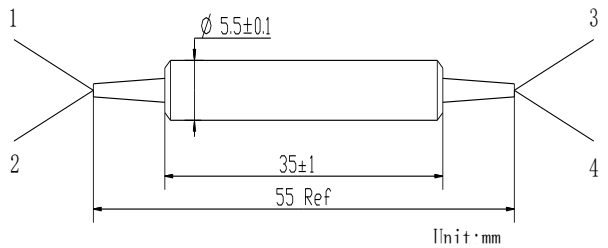


Optical Path of B Type:Port 1 to Port2/3,Port 2 is Tap Port；
Port 3 to Port1/4,Port 4 is Tap Port；
Optical Path of F Type:Port 1 to Port3/4,Port 4 is Tap Port；
Port 3 to Port1/2,Port 2 is Tap Port.

**Ordering Information**

HPMFC-①①-②-③-④-⑤⑤-⑥⑥⑥⑥-⑦⑦⑦⑦-⑧-⑨-⑩⑩

①①: Wavelength
31 - 1310nm
55 - 1550nm
SS - Specify

②: Port
1 - 1x2
2 - 2x2

③: Coupling Ratio
01 - 1/99
02 - 2/98
05 - 5/95
10 - 10/90
50 - 50/50
S - Specify

④: Axis Alignment
F - Fast Axis Blocked
B - Both Axis Working

⑤⑤: Handling Power
01 - 1W (only for Splitter)
02 - 2W (only for Splitter)

⑥⑥⑥⑥: Connector Type on Port 1, 2, 3 & 4
1B - FC/UPC
2B - FC/APC
3D - SC/UPC
4D - SC/APC
N - None
S - Specify

⑦⑦⑦⑦: Fiber Jacket on Port 1, 2, 3 & 4
B - Bare Fiber
C - 900um Loose Tube(Red)
D - 900um Loose Tube(Blue)
E - 900um Loose Tube(Black)
SS - Specify

⑧: Fiber Length
1 - 1.0m
S - Specify

⑨: Fiber Type
01B - PM1550 Fiber on all Port
07B - PM1310 Fiber on all port
09 - Nufern PM1550-XP Fiber on all Port
13B - PM1550 on Port1 & 3, SMF-28e on Port 2
S - Specify

⑩⑩: Package Dimensions
01 - Ø5.5x35
S - Specify

# High Power Polarization Maintaining Filter Coupler 19xx~20xxnm 1~10W

Spec No.: CAT-05-059B Date:

## Specifications

| Parameters | Unit | Values | |
|---|---|---|---|
| Port Type | - | 1X2 | 2X2 |
| Center Wavelength | nm | 2000 | |
| Operating Wavelength Range | nm | ±50 | |
| Max. Excess Loss | dB | 1.2 | 1.5 |
| Max. Uniformity (only for 50/50) | dB | 0.8 | 1.0 |
| Tap Ratio (Port 2/4) | % | 1±0.3, 2±0.6, 5±1.2, 10±2 & 50 | |
| Min. Return Loss | dB | 50 | |
| Min. Extinction Ratio (only for F type) | dB | 20 | 18 |
| Min. Extinction Ratio (only for B type) | dB | 18 | 16 |
| Max. Optical Power (CW) | W | 1, 3, 5 or Specify (only for Splitter) | |
| Max. Peak Power for ns Pulse | kW | 10 | |
| Max. Tensile Load | N | 5 | |
| Fiber Type | - | PM Panda Fiber | |
| Operating Temperature | ℃ | -5 ~ +70 | |
| Storage Temperature | ℃ | -40 ~ +85 | |

* Above specifications are for devices without the connectors.
* For devices with connectors, IL will be 0.3dB higher, RL will be 5dB lower, ER will be 2dB lower, optical power is only 1W.
* The PM fiber and the connector key are aligned to the slow axis.
* For F type, fast axis is blocked, the input must be linear polarized light, and the input polarization must be aligned properly.

## Package Dimensions

**1×2**

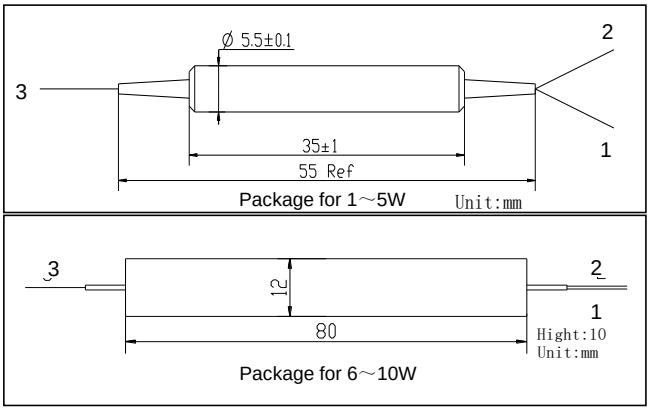


Optical Path of B Type: Port 1 to Port 2/3, Port 2 is Tap Port.
Optical Path of F Type: Port 3 to Port 1/2, Port 2 is Tap Port.

**2×2**

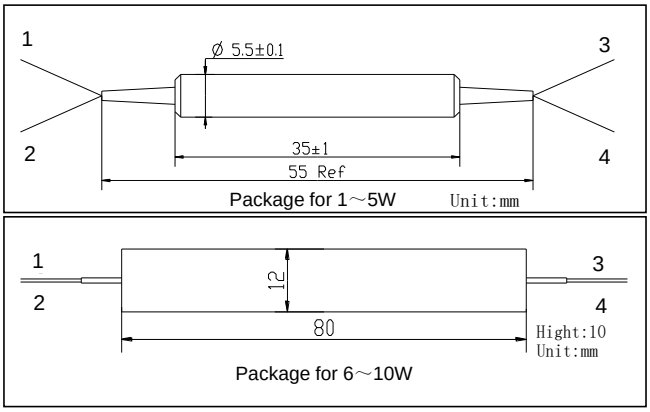


Optical Path of B Type: Port 1 to Port 2/3, Port 2 is Tap Port,
Port 3 to Port 1/4, Port 4 is Tap Port.
Optical Path of F Type: Port 1 to Port 3/4, Port 4 is Tap Port,
Port 3 to Port 1/2, Port 2 is Tap Port.

## Ordering Information

**1×2 HPMFC**-①-②-③-④-⑤-⑥⑥⑥-⑦⑦⑦-⑧-⑨-⑩

**2×2 HPMFC**-①-②-③-④-⑤-⑥⑥⑥⑥-⑦⑦⑦⑦-⑧-⑨-⑩

①: Wavelength
20 - 2000nm
S - Specify

②: Port
1 - 1x2
2 - 2x2

③: Coupling Ratio
01 - 1/99
02 - 2/98
05 - 5/95
10 - 10/90
50 - 50/50
S - Specify

④: Axis Alignment
F - Fast Axis Blocked
B - Both Axis Working

⑤: Handling Power
01 - 1W
03 - 3W
05 - 5W
S - Specify

⑥⑥⑥: Connector Type on Port 1, 2&3
1A - FC/UPC
2A - FC/APC
3D - SC/UPC
4D - SC/APC
N - None
S - Specify

⑦⑦⑦: Fiber Jacket on Port 1, 2&3
B - 250um Bare Fiber
C - 900um Loose Tube (Red)
R - 3mm Cable (Blue)
SS - Specify

⑧: Fiber Length
0.8 - 0.8m
S - Specify

⑨: Fiber Type
12 - Nufern PM1950 Fiber on all Port
S - Specify

⑩: Package Dimensions
01 - Ø5.5x35
08 - 80*12*10
S - Specify

Spec No.: CAT-10-015C Date:

**Specifications**

| Parameters | Unit | Values | |
|---|---|---|---|
| Port Type | - | 1X2 | 2X2 |
| Center Wavelength | nm | 2000 | |
| Operating Wavelength Range | nm | ±50 | |
| Max. Excess Loss | dB | 1.2 | 1.5 |
| Max. Uniformity (only for 50/50) | dB | 0.8 | 1.0 |
| Tap Ratio (Port 2/4) | % | 1±0.3%, 2±0.6%, 5±1.2%, 10%, and 50% | |
| Min. Return Loss | dB | 50 | |
| Min. Extinction Ratio (only for F type) | dB | 20 | 18 |
| Min. Extinction Ratio (only for B type) | dB | 18 | 16 |
| Max. Optical Power (CW) | mW | 500 (only for Splitter) | |
| Max. Tensile Load | N | 5 | |
| Fiber Type | | PM Panda Fiber | |
| Operating Temperature | ℃ | -5 to +70 | |
| Storage Temperature | ℃ | -40 to +85 | |

* Above specifications are for devices without the connectors.

* For devices with connectors, IL will be 0.3dB higher, RL will be 5dB lower, and ER will be 2dB lower.

*The PM fiber and the connector key are aligned to the slow axis.

*The material must be RoHS compliant.

**Package Dimensions**

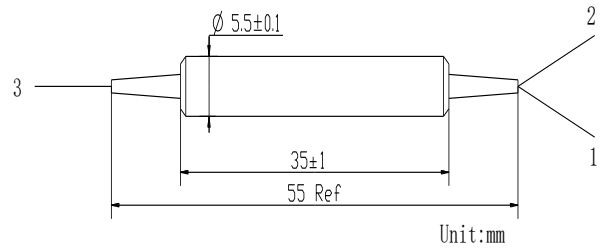


Optical Path of B Type:Port 1 to Port2/3,Port 2 is Tap Port
Optical Path of F Type:Port 3 to Port1/2,Port 2 is Tap Port.

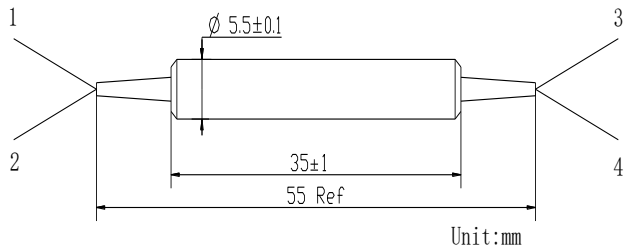


Optical Path of B Type:Port 1 to Port2/3,Port 2 is Tap Port
Port 3 to Port1/4,Port 4 is Tap Port
Optical Path of F Type:Port 1 to Port3/4,Port 4 is Tap Port
Port 3 to Port1/2,Port 2 is Tap Port.

**Ordering Information**

PMFC-①-②-③-④-⑤-⑥⑥⑥⑥-⑦⑦⑦⑦-⑧-⑨-⑩

①: Wavelength
20 - 2000nm
SS - Specify

②: Port
1 - 1x2
2 - 2x2

③: Coupling Ratio
01 - 1/99
10 - 10/90
50 - 50/50
S - Specify

④: Axis Alignment
F - Fast Axis Blocked
B - Both Axis Working

⑤: Handling Power
0.5 - 0.5W (only for Splitter)

⑥⑥⑥⑥: Connector Type on Port 1, 2, 3 & 4
1A - FC/UPC
2A - FC/APC
3D - SC/UPC
4D - SC/APC
N - None
S - Specify

⑦⑦⑦⑦: Fiber Jacket on Port 1, 2, 3 & 4
B - Bare Fiber
C - 900um Loose Tube(Red)
D - 900um Loose Tube(Blue)
E - 900um Loose Tube(Black)
SS - Specify

⑧: Fiber Length
1 - 1.0m
S - Specify

⑨: Fiber Type
01A - PM 1550
17 - Nufern PM1950
S - Specify

⑩: Package Dimensions
01 - Ø5.5x35
S - Specify

# Polarization Maintaining Single Mode Standard Coupler 4xx~5xxnm 200mW

Spec Review No.: SR2411043A

Date: Nov. 29, 2024

**Specifications**

| Parameters | Unit | Values | | | | | | | |
|---|---|---|---|---|---|---|---|---|---|
| Center Wavelength | nm | 509 | | | | | | | |
| Coupling Ratio | % | 1/99 | 2/98 | 5/95 | 10/90 | 20/80 | 30/70 | 40/60 | 50/50 |
| Max. Coupling Ratio Tolerance 25℃ | % | ±0.3 | ±0.6 | ±0.8 | ±1 | ±1.8 | ±2.2 | ±2.5 | ±3.0 |
| Max. Excess Loss 25℃ | dB | 1.2 | | | | | | | |
| Min. Extinction Ratio 25℃ | dB | NA/18 | 15/18 | | 18/18 | | | | |
| Min. Return Loss 25℃ | dB | 50 | | | | | | | |
| Max. Optical Power (CW) | mW | 300 | | | | | | | |
| Max. Tensile Load | N | 5 | | | | | | | |
| Operating Temperature | ℃ | -5 to + 70 | | | | | | | |
| Storage Temperature | ℃ | -40 to + 85 | | | | | | | |
| Fiber Type | - | PM480 Fiber | | | | | | | |
| Package Dimensions | mm | Ø3.0X54 | | | | | | | |

*Above specifications are for device without connector.

* The material must be RoHS compliant.

**Package Dimensions**

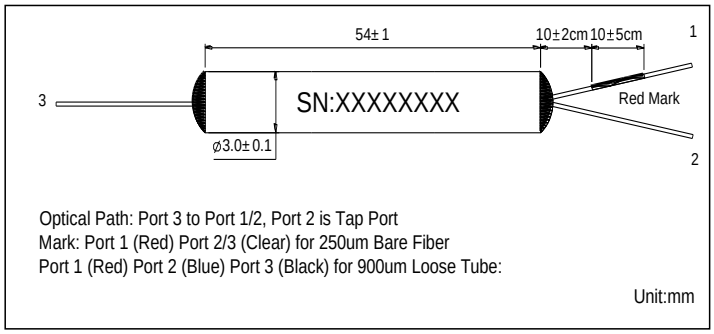


**Ordering Information**

**PMSMC-**①①-②-③③-④④④-⑤⑤⑤-⑥-⑦⑦-⑧⑧

①①: Wavelength
509 - 509nm

②: Port
1 - 1X2

③③: Coupling Ratio
01 - 1/99
02 - 2/98
05 - 5/95
10 - 10/90
20 - 20/80
30 - 30/70
40 - 40/60
50 - 50/50
SS - Specify

④④④: Connector Type
N - None

⑤⑤⑤: Fiber Jacket
B - 250um Bare Fiber
C - 900um Loose Tube(Red)
D - 900um Loose Tube(Blue)
E - 900um Loose Tube(Black)

⑥: Fiber Length
1 - 1.0m
S - Specify

⑦⑦: Fiber Type
86 - PM480 Fiber

⑧⑧: Package Dimensions
13 - Ø3.0 x54

# Single Mode Standard Coupler 4xx~5xxnm 200mW

Spec Review No.: SR1809010B

Date: Nov. 13, 2023

## Specifications

| Parameters | Unit | Values | | | | | | | | |
|---|---|---|---|---|---|---|---|---|---|---|
| Center Wavelength | nm | 518 or 532 | | | | | | | | |
| Operating Wavelength Range | nm | ±15 | | | | | | | | |
| Coupling Ratio (Port2/Port1) | % | 1/99 | 2/98 | 3/97 | 5/95 | 10/90 | 20/80 | 30/70 | 40/60 | 50/50 |
| Max. Insertion Loss @Central wavelength (Port 3→2,1) | dB | 24/1.2 | 19.0/1.3 | 18.3/1.4 | 17.0/1.6 | 13.0/1.9 | 8.5/2.4 | 6.7/2.9 | 5.4/3.6 | 4.5 |
| Min. Return Loss (Port2/Port1) | dB | 50 | | | | | | | | |
| Max. Optical Power (CW) | mW | 200 | | | | | | | | |
| Max. Tensile Load | N | 5 | | | | | | | | |
| Operating Temperature | ℃ | 0 to + 70 | | | | | | | | |
| Storage Temperature | ℃ | -40 to + 75 | | | | | | | | |
| Fiber Type | - | Nufern 460-HP Fiber | | | | | | | | |
| Package Dimensions | mm | Ø3.0X54 | | | | | | | | |

*Above specifications are for device without connector.

*For devices with connectors, IL will be 0.7dB higher,RL will be 5dB lower.

*The material must be RoHS compliant.

## Package Dimensions

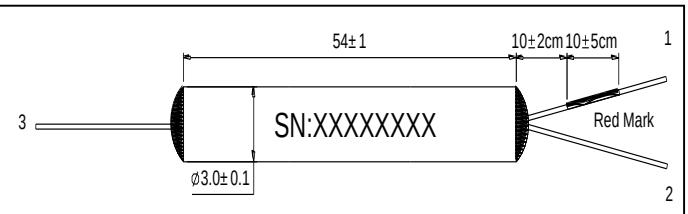


Optical Path: Port 3 to Port 1/2, Port 2 is Tap Port
Mark: Port 1 (Red) Port 2/3 (Clear) for 250um Bare Fiber
Port 1 (Red) Port 2 (Blue) Port 3 (Black) for 900um Loose Tube:

Unit:mm

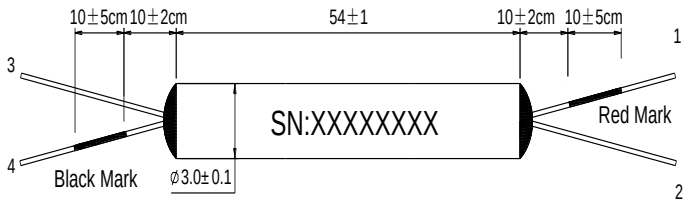


Optical Path: Port 3 to Port 1/2, Port 1 is Tap Port;
Port 4 to Port 1/2, Port 2 is Tap Port.
Mark: Port 1 (Red) Port 4 (Black) Port 2/3 (Clear) for 250um Bare Fiber,
Port 1 (Red) Port 2 (Blue) Port 3 (White) Port 4 (Black) for 900um Loose Tube

Unit:mm

## Ordering Information

**SMC-**①①-②-③③-④④④-⑤⑤⑤-⑥-⑦⑦-⑧⑧

①①: Wavelength
- 518 - 518nm
- 532 - 532nm
- SS - Specify

②: Port
- 1 - 1X2
- 2 - 2X2

③③: Coupling Ratio
- 01 - 1/99
- 02 - 2/98
- 03 - 3/97
- 05 - 5/95
- 10 - 10/90
- 20 - 20/80
- 30 - 30/70
- 40 - 40/60
- 50 - 50/50
- SS - Specify

④④④: Connector Type on all Ports
- 1G - FC/UPC
- 2G - FC/APC
- N - None
- S - Specify

⑤⑤⑤: Fiber Jacket on all Ports
- B - 250um Bare Fiber
- C - 900um Loose Tube (Red)
- D - 900um Loose Tube (Blue)
- E - 900um Loose Tube (Black)
- F - 900um Loose Tube (White)

⑥: Fiber Length
- 1 - 1.0m
- S - Specify

⑦⑦: Fiber Type
- 54 - Nufern 460-HP Fiber
- S - Specify

⑧⑧: Package Dimensions
- 13 - Ø3.0x54mm

# Polarization Maintaining Single Mode Standard Coupler 6xxnm 300mW

Spec Review No.: SR2109020A

Date: Sep. 15, 2021

## Specifications

| Parameters | Unit | Values | | | | | | | |
|---|---|---|---|---|---|---|---|---|---|
| Center Wavelength | nm | 740 | | | | | | | |
| Operating Wavelength Range | nm | ±10 | | | | | | | |
| Coupling Ratio | % | 1/99 | 2/98 | 5/95 | 10/90 | 20/80 | 30/70 | 40/60 | 50/50 |
| Max. Coupling Ratio Tolerance | % | ±0.5 | ±0.8 | ±1.5 | ±2.2 | ±2.5 | ±3.0 | ±4.0 | ±5.0 |
| Max. Excess Loss | dB | 1.0 | | | | | | | |
| Min. Extinction Ratio | dB | NA/15 | 12/15 | 12/15 | 12/15 | 15/15 | 15/15 | 15/15 | 15/15 |
| Min. Return Loss | dB | 50 | | | | | | | |
| Max. Optical Power (CW) | mW | 500 | | | | | | | |
| Max. Tensile Load | N | 5 | | | | | | | |
| Operating Temperature | ℃ | -5 to + 70 | | | | | | | |
| Storage Temperature | ℃ | -40 to + 75 | | | | | | | |
| Fiber Type | - | Nufern PM630-HP fiber | | | | | | | |
| Package Dimensions | mm | Ø3.0x54 | | | | | | | |

* Above specifications are for devices without the connectors.

* For devices with connectors, IL will be 1.0dB higher, RL will be 5dB lower and ER will be 2dB lower.

*The PM fiber and the connector key are aligned to the slow axis.

*The material must be RoHS compliant.

## Package Dimensions

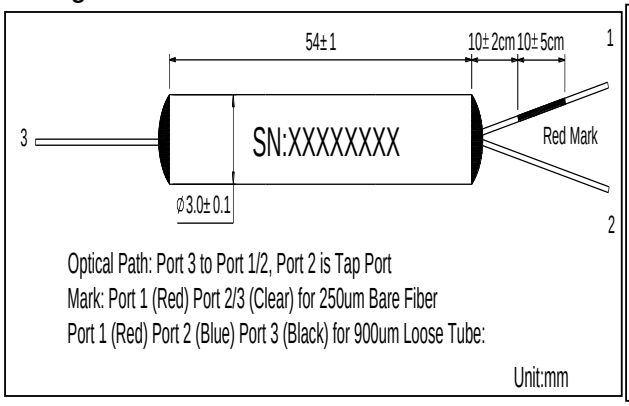


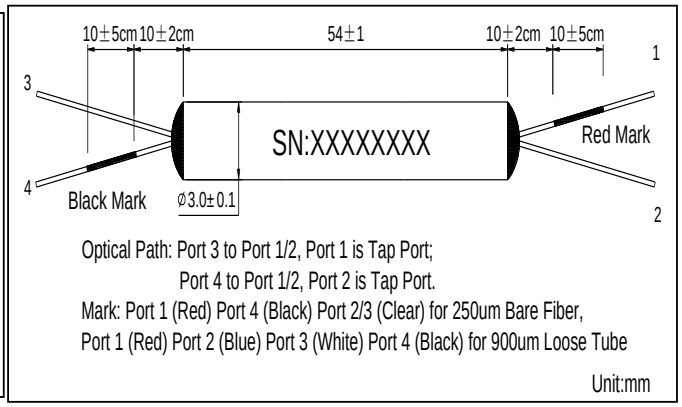


## Ordering Information

**PMSMC-①①-②-③③-④④④④-⑤⑤⑤⑤-⑥**

①①: Wavelength
- 74 - 740nm
- SS - Specify

②: Port
- 1 - 1X2
- 2 - 2X2

③③: Coupling Ratio
- 01 - 1/99
- 02 - 2/98
- 05 - 5/95
- 10 - 10/90
- 20 - 20/80
- 30 - 30/70
- 40 - 40/60
- 50 - 50/50
- SS - Specify

④④④④: Connector Type
- 1 - FC/UPC
- 2 - FC/APC
- 3 - SC/UPC
- 4 - SC/APC
- N - None
- S - Specify

⑤⑤⑤⑤: Fiber Jacket
- B - 250um Fiber
- L - 900um Loose Tube
- S - Specify

⑥: Fiber Length
- 1 - 1.0m
- S - Specify

# Single Mode Standard Coupler 6xxnm 300mW

Spec Review No.: SR2402018A

Date: Feb. 20, 2024

## Specifications

| Parameters | Unit | Values |
|---|---|---|
| Center Wavelength | nm | 630 |
| Operating Wavelength Range | nm | ±10 |
| Coupling Ratio | % | 10/90 |
| Max. Insertion Loss | dB | 11.5/1.2 |
| Min. Return Loss | dB | 50 |
| Directivity | dB | 50 |
| Max. Optical Power (CW) | mW | 100 |
| Max. Tensile Load | N | 5 |
| Operating Temperature | °C | 0 to + 70 |
| Storage Temperature | °C | -40 to + 75 |
| Fiber Type | - | 630 HP Fiber |
| Package Dimensions | mm | Ø3.0X56 |

*Above specifications are for device without connector.

*For devices with connectors, IL will be 0.9dB higher,RL will be 5dB lower.

* The material must be RoHS compliant.

## Package Dimensions

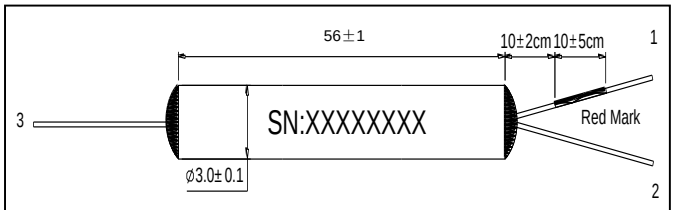


Optical Path: Port 3 to Port 1/2, Port 2 is Tap Port
Mark: Port 1 (Red) Port 2/3 (Clear) for 250um Bare Fiber
Port 1 (Red) Port 2 (Blue) Port 3 (Black) for 900um Loose Tube:

Unit:mm

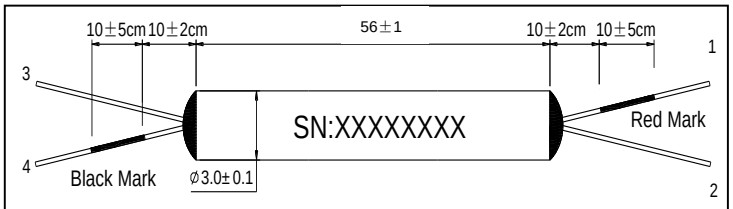


Optical Path: Port 3 to Port 1/2, Port 1 is Tap Port;
Port 4 to Port 1/2, Port 2 is Tap Port.
Mark: Port 1 (Red) Port 4 (Black) Port 2/3 (Clear) for 250um Bare Fiber,
Port 1 (Red) Port 2 (Blue) Port 3 (White) Port 4 (Black) for 900um Loose Tube

Unit:mm

## Ordering Information

**SMC-**①①-②-③③-④④④-⑤⑤⑤-⑥-⑦⑦-⑧⑧

①①: Wavelength
63 - 630nm
SS - Specify

②: Port
1 - 1X2
2 - 2X2

③③: Coupling Ratio
10 - 10/90

④④④: Connector Type
1B - FC/UPC
2B - FC/APC
N - None
S - Specify

⑤⑤⑤: Fiber Jacket
B -250um Bare Fiber
C - 900um Loose Tube(Red)
D - 900um Loose Tube(Blue)
E - 900um Loose Tube(Black)
F - 900um Loose Tube(White)

⑥: Fiber Length
2 - 2.0m
S - Specify

⑦⑦:Fiber Type
24 - 630-HP Fiber

⑧⑧: Package Dimensions
16 - Ø3.0x56

# Polarization Maintaining Single Mode Standard Coupler 7xx~8xxnm 300mW

Spec Review No.: SR2202013A

Date: Feb. 16, 2022

## Specifications

| Parameters | Unit | Values | | | | | | | |
|---|---|---|---|---|---|---|---|---|---|
| Center Wavelength | nm | 870, 935 | | | | | | | |
| Operating Wavelength Range | nm | ±10 | | | | | | | |
| Coupling Ratio | % | 1/99 | 2/98 | 5/95 | 10/90 | 20/80 | 30/70 | 40/60 | 50/50 |
| Max. Coupling Ratio Tolerance | % | ±0.5 | ±0.8 | ±1.5 | ±2.2 | ±2.5 | ±3.0 | ±4.0 | ±5.0 |
| Max. Excess Loss | dB | 0.8 | | | | | | | |
| Min. Extinction Ratio | dB | NA/17 | 14/17 | 14/17 | 14/17 | 17/17 | 17/17 | 17/17 | 17/17 |
| Min. Return Loss | dB | 50 | | | | | | | |
| Max. Optical Power (CW) | mW | 500 | | | | | | | |
| Max. Tensile Load | N | 5 | | | | | | | |
| Operating Temperature | ℃ | -5 to + 70 | | | | | | | |
| Storage Temperature | ℃ | -40 to + 75 | | | | | | | |
| Fiber Type | - | Nufern PM780-HP fiber | | | | | | | |
| Package Dimensions | mm | Ø3.0x54 | | | | | | | |

* Above specifications are for devices without the connectors.
* For devices with connectors, IL will be 0.7dB higher, RL will be 5dB lower and ER will be 2dB lower.
* The PM fiber and the connector key are aligned to the slow axis.
* The material must be RoHS compliant.

## Package Dimensions

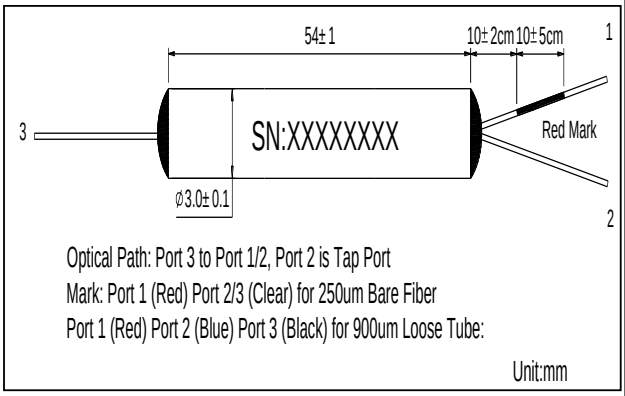


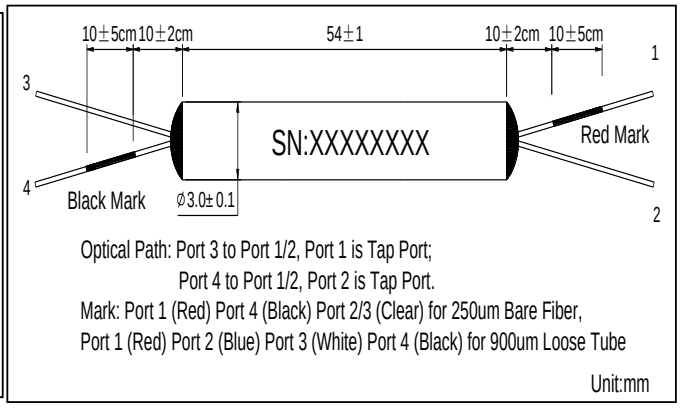


## Ordering Information

**PMSMC-①①-②-③③-④④④④-⑤⑤⑤⑤-⑥**

①①: Wavelength
- 87 -870nm
- 93 - 935nm
- SS - Specify

②: Port
- 1 - 1X2
- 2 - 2X2

③③: Coupling Ratio
- 01 - 1/99
- 02 - 2/98
- 05 - 5/95
- 10 - 10/90
- 20 - 20/80
- 30 - 30/70
- 40 - 40/60
- 50 - 50/50
- SS - Specify

④④④④: Connector Type on all Ports
- 1 - FC/UPC
- 2 - FC/APC
- 3 - SC/UPC
- 4 - SC/APC
- N - None
- S - Specify

⑤⑤⑤⑤: Fiber Jacket on all Ports
- B - 250um Fiber
- L - 900um Loose Tube
- S - Specify

⑥: Fiber Length
- 1 - 1.0m
- S - Specify

# Single Mode Standard Coupler 7xx~8xxnm 300mW

Spec Review No.: SR2310034A Date: Oct. 16, 2023

## Specifications

| Parameters | Unit | Values | | | | | | | | |
|---|---|---|---|---|---|---|---|---|---|---|
| Center Wavelength | nm | 780 | | | | | | | | |
| Operating Wavelength Range | nm | ±10 | | | | | | | | |
| Coupling Ratio | % | 50/50 | 40/60 | 30/70 | 20/80 | 10/90 | 5/95 | 3/97 | 2/98 | 1/99 |
| Max. Insertion Loss | dB | 3.5 | 4.5/2.7 | 5.8/2.0 | 7.7/1.3 | 10.8/0.85 | 14.0/0.5 | 16.5/0.4 | 18.5/0.35 | 21.5/0.3 |
| Max. Polarization Dependent Loss | dB | 0.1 | 0.1 | 0.1 | 0.1 | 0.15/0.05 | 0.15/0.05 | 0.15/0.05 | 0.15/0.05 | 0.15/0.05 |
| Min. Return Loss | dB | 50 | | | | | | | | |
| Min. Directivity | dB | 50 | | | | | | | | |
| Max. Optical Power CW | mW | 500 | | | | | | | | |
| Max. Tensile Load | N | 5 | | | | | | | | |
| Operating Temperature | ℃ | -5 to +70 | | | | | | | | |
| Storage Temperature | ℃ | -40 to +85 | | | | | | | | |
| Package Dimensions | mm | 250um Bare Fiber | | | | | | Ø3.0 X 40 | | |
| | | 900um Loose Tube | | | | | | Ø3.0 X 56 | | |

*Above specifications are for device without connector.

*For devices with connectors, IL will be 0.7dB higher, RL will be 5dB lower.

*The material must be RoHS compliant.

## Package Dimensions

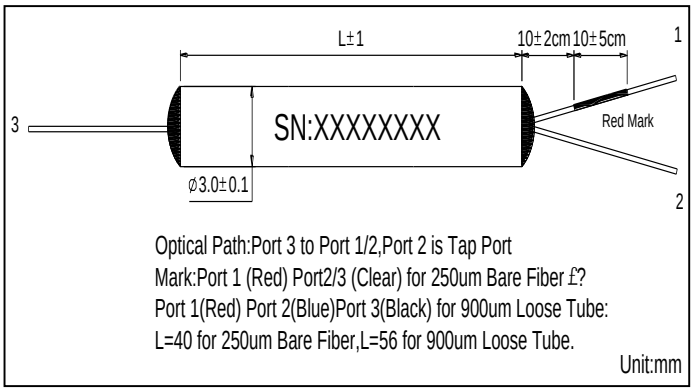


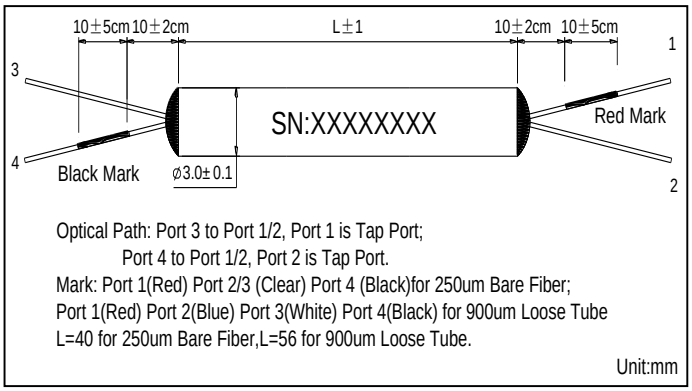


## Ordering information

**SMC-**①①-②-③③-④④④④-⑤⑤⑤⑤-⑥-⑦⑦-⑧⑧

①①: Wavelength
78 - 780nm
SS - Specify

②: Port
1 - 1X2
2 - 2X2

③③: Coupling Ratio
50 - 50/50
40 - 40/60
30 - 30/70
20 - 20/70
10 - 10/90
05 - 5/95
03 - 3/97
02 - 2/98
01 - 1/99
SS - Specify

④④④④: Connector Type
1B - FC/UPC
2B - FC/APC
3D - SC/UPC
4D - SC/APC
S - Specify

⑤⑤⑤⑤: Fiber Jacket
B -250um Bare Fiber
C - 900um Loose Tube(Red)
D - 900um Loose Tube(Blue)
E - 900um Loose Tube(Black)
F - 900um Loose Tube(White)

⑥: Fiber Length
1 - 1m
S - Specify

⑦⑦:Fiber Type
13 - HI780 Fiber
14 - Nufern 780-HP Fiber

⑧⑧:Package Dimensions
14 - Ø3.0X40
16 - Ø3.0X56

# Polarization Maintaining Single Mode Standard Coupler 9xx~20xxnm 500mW

Spec No.: CAT-03-021C Date:

## Specifications

| Parameters | | Unit | Premium | A grade | Premium | A grade |
|---|---|---|---|---|---|---|
| Center Wavelength | | nm | 980,1030,1064 or Specify | | 1310,1480,1550,1940,2000 or Specify | |
| Operating W.L. | | nm | ±20 | | ±20 | |
| Max. Splitting Ratio Tolerance (CR) | 50/50 | % | ±5.0 | ±6.0 | ±5.0 | ±6.0 |
| | 40/60 | % | ±4.0 | ±4.8 | ±4.0 | ±4.8 |
| | 30/70 | % | ±3.0 | ±3.7 | ±3.0 | ±3.7 |
| | 20/80 | % | ±2.5 | ±3.0 | ±2.5 | ±3.0 |
| | 10/90 | % | ±2.2 | ±2.4 | ±2.2 | ±2.4 |
| | 5/95 | % | ±1.5 | ±1.7 | ±1.5 | ±1.7 |
| | 3/97 | % | ±1.1 | ±1.3 | ±1.1 | ±1.3 |
| | 2/98 | % | ±0.8 | ±1.0 | ±0.8 | ±1.0 |
| | 1/99 | % | ±0.5 | ±0.6 | ±0.5 | ±0.6 |
| Min. Polarization Extinction Ratio | CR＞10% | dB | 18 | 15 | 20 | 17 |
| | 10%≥CR＞1% | dB | 14 | 11 | 16 | 13 |
| | CR≤1% | dB | NA | NA | NA | NA |
| Max. Excess Loss | | dB | 0.8 | 1.0 | 0.4 | 0.6 |
| Min. Return loss | | dB | 50 | | | |
| Max. Power Handling | | mW | 500 | | | |
| Operating Temperature | | ℃ | -5～70 | | | |
| Storage Temperature | | ℃ | -40～85 | | | |
| Fiber Type | | - | PM Fiber | | | |
| Package Dimensions | 250um Bare Fiber | mm | Ø3.0×50 or Ø3.0×40 | | | |
| | 900um Loose Tube | mm | Ø3.0×56 | | | |

*Above specifications are for device without connector.

*For devices with connectors, IL will be 0.3dB (1310~2000) or 0.5dB (980~1064) higher, ER will be 2dB lower and RL will be 5dB lower.

*The PM fiber and the connector key are aligned to the slow axis.

* The material must be RoHS compliant.

## Package Dimensions

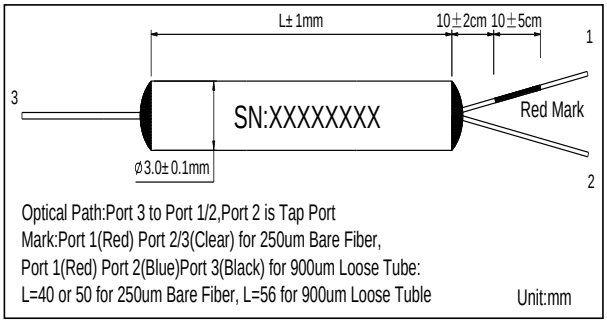


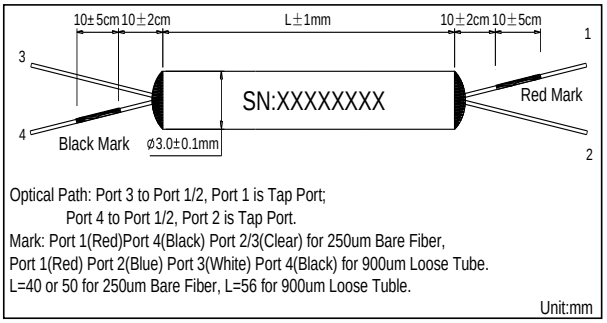


## Ordering Information

**PMSMC-①①-②-③③-④④④④-⑤⑤⑤⑤-⑥-⑦⑦-⑧⑧**

①①: Wavelength
- 98 - 980nm
- 03 - 1030nm
- 06 - 1064nm
- 31 - 1310nm
- 55 - 1550nm
- 19 - 1940nm
- 20 - 2000nm
- SS - Specify

②: Port
- 1 - 1X2
- 2 - 2X2

③③: Coupling Ratio
- 01 - 1/99
- 02 - 2/98
- 05 - 5/95
- 10 - 10/90
- 20 - 20/80
- 30 - 30/70
- 40 - 40/60
- 50 - 50/50
- SS - Specify

④④④④: Connector Type
- 1B - FC/UPC
- 2B - FC/APC
- 3B - SC/UPC
- 4B - SC/APC
- N - None
- S - Specify

⑤⑤⑤⑤: Fiber Jacket
- B -250um Bare Fiber
- C - 900um Loose Tube(Red)
- D - 900um Loose Tube(Blue)
- E - 900um Loose Tube(Black)
- F - 900um Loose Tube(White)

⑥: Fiber Length
- 1 - 1.0m
- S - Specify

⑦⑦: Fiber Type
- 01 - PM 980 Fiber
- 02 - PM 980 Fiber(长飞)
- 03 - Nufern PM980-XP fiber
- 04 - PM1550 Fiber
- 05 - PM 1550 Fiber(长飞)
- 06 - Nufern PM1550-XP Fiber
- 30 - PM1950 Fiber

⑧⑧: Package Size
- 12 - Ø3.0×50
- 14 - Ø3.0×40
- 16 - Ø3.0×56

# Single Mode Standard Coupler 9xx~10xxnm 500mW

Spec No.: CAT-03-012C Date:

**Specifications**

| Parameters | Unit | Values | | | | | | | | |
|---|---|---|---|---|---|---|---|---|---|---|
| Operating Wavelength | nm | 980 or 1060 | | | | | | | | |
| Bandwidth | nm | ±10 | | | | | | | | |
| Coupling Ratio | % | 1/99 | 2/98 | 3/97 | 5/95 | 10/90 | 20/80 | 30/70 | 40/60 | 50/50 |
| Max. Insertion Loss | dB | 21.9/0.25 | 18.5/0.3 | 16.5/0.35 | 14.5/0.45 | 11.0/0.7 | 7.7/1.3 | 5.8/2.0 | 4.5/2.7 | 3.5 |
| Max. PDL(Tap/Through Port) | dB | 0.12/0.05 | 0.12/0.05 | 0.12/0.05 | 0.10/0.05 | 0.10/0.05 | 0.08 | 0.08 | 0.08 | 0.08 |
| Wavelength Dependent Loss | dB | 0.4/0.15 | 0.4/0.15 | 0.4/0.15 | 0.4/0.15 | 0.3/0.15 | 0.3/0.15 | 0.3/0.15 | 0.2 | 0.2 |
| Min. Return Loss | dB | 50 | | | | | | | | |
| Min. Directivity | dB | 50 | | | | | | | | |
| Max. Optical Power CW | mW | 500 | | | | | | | | |
| Max. Tensile Load | N | 5 | | | | | | | | |
| Thermal Stability | dB/℃ | ≤ 0.002 over -5 °C to +70 °C | | | | | | | | |
| Operating Temperature | ℃ | -5 to +70 | | | | | | | | |
| Storage Temperature | ℃ | -40 to +85 | | | | | | | | |
| Package Dimensions | mm | 250um bare fiber | | | | | | Ø3.0 X 40 | | |
| | | 900um loose tube | | | | | | Ø3.0 X 56 | | |
| | | 3mm loose cable | | | | | | 90X16X9 | | |

*Above specifications are for device without connector

*For devices with connectors, IL will be 0.3dB higher and RL will be 5dB lower.

* The material must be RoHS compliant.

**Package Dimensions**


Optical Path: Port 3 to Port 1/2, Port 2 is Tap Port.
Mark: Port 1(Red) Port 2/3(Clear) for 250um Bare Fiber, 10cm to component extend 10cm length color mark;
Port 1(Red) Port 2(Blue)Port 3(Black) for 900um Loose Tube;
Port 1(Red) Other is cable color for 3mm Yellow cable, 10cm to component extend 10cm length color mark.


Optical Path: Port 3 to Port 1/2, Port 1 is Tap Port;
Port 4 to Port 1/2, Port 2 is Tap Port.
Mark: Port 1(Red)Port 4(Black) Port 2/3(Clear) for 250um Bare Fiber, 10cm to component extend 10cm length color mark;
Port 1(Red) Port 2(Blue) Port 3(White) Port 4(Black) for 900um Loose Tube;
Port 1(Red)Port 4(Black) Other is cable color for 3mm Yellow cable, 10cm to component extend 10cm length color mark.

## Ordering information

**SMC-①①-②-③③-④④④④-⑤⑤⑤⑤-⑥-⑦⑦-⑧⑧**

①①: Wavelength
06 - 1060
98 - 980
SS - Specify

②: Port
1 - 1X2
2 - 2X2

③③: Coupling Ratio
01-1/99
02-2/98
03-3/97
05-5/95
10-10/90
20-20/80
30-30/70
40-40/60
50-50/50
SS-Specify

④④④④: Connector Type on all Ports
1B - FC/UPC
2B - FC/APC
3B - SC/UPC
4B - SC/APC
N - None
S - Specify

⑤⑤⑤⑤: Fiber Jacket on all Ports
B -250um Bare Fiber
C - 900um Loose Tube(Red)
D - 900um Loose Tube(Blue)
E - 900um Loose Tube(Black)
F - 900um Loose Tube(White)
T - 3mm松套管(黄色)

⑥: Fiber Length
1 - 1m
S - Specify

⑦⑦: Fiber Option
66 - OFS980 Fiber
20 - HI1060 Flex Fiber
1E - HI1060 Fiber
22 - SM-GSF-10/125 Fiber
S - Specify

⑧⑧:Package Dimensions
14 - Ø3.0X40
16 - Ø3.0X56
29 - 90x16x9

# High Power Polarization Maintaining Single Mode Standard Coupler 9xx~20xxnm 20~50W

Spec No.: CAT-03-015C Date:

## Specifications

| Parameters | | Unit | Premium | A grade | Premium | A grade |
|---|---|---|---|---|---|---|
| Center Wavelength | | nm | 980,1030,1064 or Specify | | 1310,1480,1550,1940,2000 or Specify | |
| Operating W.L. | | nm | ±20 | | ±20 | |
| Max. Splitting Ratio Tolerance (CR) | 50/50 | % | ±5.0 | ±6.0 | ±5.0 | ±6.0 |
| | 40/60 | % | ±4.0 | ±4.8 | ±4.0 | ±4.8 |
| | 30/70 | % | ±3.0 | ±3.7 | ±3.0 | ±3.7 |
| | 20/80 | % | ±2.5 | ±3.0 | ±2.5 | ±3.0 |
| | 10/90 | % | ±2.2 | ±2.4 | ±2.2 | ±2.4 |
| | 5/95 | % | ±1.5 | ±1.7 | ±1.5 | ±1.7 |
| | 3/97 | % | ±1.1 | ±1.3 | ±1.1 | ±1.3 |
| | 2/98 | % | ±0.8 | ±1.0 | ±0.8 | ±1.0 |
| | 1/99 | % | ±0.5 | ±0.6 | ±0.5 | ±0.6 |
| Min. Polarization Extinction Ratio | CR＞10% | dB | 18 | 15 | 20 | 17 |
| | 10%≥CR＞1% | dB | 14 | 11 | 16 | 13 |
| | CR≤1% | dB | NA | NA | NA | NA |
| Max. Excess Loss | | dB | 0.8 | 1.0 | 0.4 | 0.6 |
| Min. Return Loss | | dB | 50 | | | |
| Max. Power Handling | | W | 1,3,5,10,20 or Specify | | | |
| Operating Temperature | | ℃ | -5～70 | | | |
| Storage Temperature | | ℃ | -40～85 | | | |
| Fiber Type | | - | PM Fiber | | | |
| Package Dimensions | Power Handling 5W | mm | Ø3.0×56 | | | |
| | Power Handling 20W | mm | 75×12×8 | | | |

*Above specifications are for device without connector.

*For devices with connectors, IL will be 0.3dB (1310~2000) or 0.5dB (980~1064) higher, ER will be 2dB lower, RL will be 5dB lower and optical power is only 1W.

*The PM fiber and the connector key are aligned to the slow axis.

* The material must be RoHS compliant.

## Package Dimensions

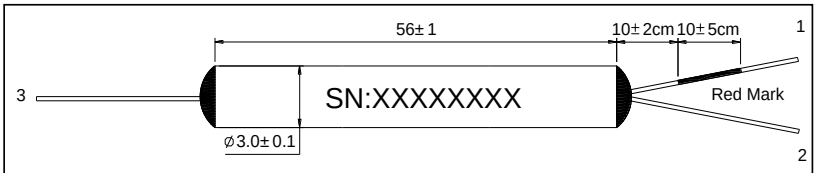


Optical Path:Port 3 to Port 1/2,Port 2 is Tap Port
Mark:Port 1 (Red) Port2/3 (Clear) for 250um Bare Fiber
Port 1(Red) Port 2(Blue)Port 3(Black) for 900um Loose Tube:

Unit:mm

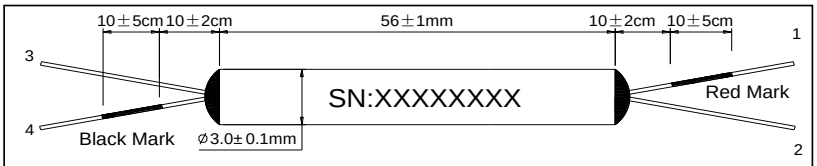


Optical Path: Port 3 to Port 1/2, Port 1 is Tap Port;
Port 4 to Port 1/2, Port 2 is Tap Port.
Mark: Port 1(Red)Port 4(Black) Port 2/3(Clear) for 250um Bare Fiber,
Port 1(Red) Port 2(Blue) Port 3(White) Port 4(Black) for 900um Loose Tube

Unit:mm

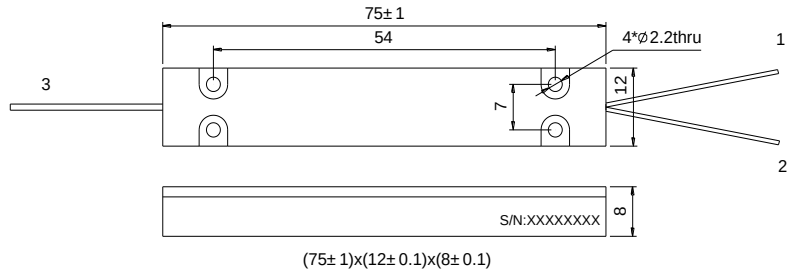


Optical Path:Port 3 to Port 1/2,Port 2 is Tap Port
Mark:Port 1/2/3(Clear) for 250um Bare Fiber,Ports Marked with Digital Label
Port 1(Red) Port 2(Blue)Port 3(Black) for 900um Loose Tube:

Unit:mm

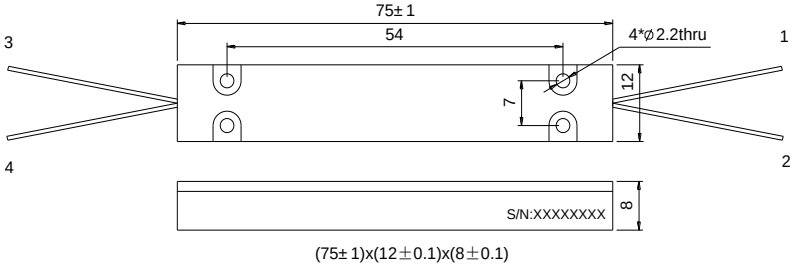


Optical Path: Port 3 to Port 1/2, Port 1 is Tap Port;
Port 4 to Port 1/2, Port 2 is Tap Port.
Mark: Port 1/2/3/4(Clear) for 250um Bare Fiber,Ports Marked with Digtal Label;
Port 1(Red) Port 2(Blue) Port 3(White) Port 4(Black) for 900um Loose Tube

Unit:mm

**Ordering Information**

**HPMSMC-①①-②-③③-④④-⑤⑤⑤⑤-⑥⑥⑥⑥-⑦-⑧⑧-⑨⑨**

①①: Wavelength
98 - 980nm
03 - 1030nm
06 - 1064nm
31 - 1310nm
55 - 1550nm
19 - 1940nm
20 - 2000nm
SS - Specify

②: Port
1 - 1X2
2 - 2X2

③③: Coupling Ratio
01 - 1/99
02 - 2/98
05 - 5/95
10 - 10/90
20 - 20/80
30 - 30/70
40 - 40/60
50 - 50/50
SS - Specify

④④:Handling Power
01 - 1W
03 - 3W
05 - 5W
10 - 10W
20 - 20W
SS - Specify

⑤⑤⑤⑤: Connector Type
1B - FC/UPC
2B - FC/APC
3B - SC/UPC
4B - SC/APC
N - None
S - Specify

⑥⑥⑥⑥: Fiber Jacket
B - 250um Bare Fiber

⑦: Fiber Length
1 - 1.0m
S - Specify

⑧⑧: Fiber Type
01 - PM 980 Fiber
02 - PM 980 Fiber(长飞）
03 - Nufern PM980-XP fiber
04 - PM1550 Fiber
05 - PM 1550 Fiber(长飞）
06 - Nufern PM1550-XP Fiber
30 - PM1950 Fiber

⑨⑨: Package Size
16 - Ø3.0×56
27 - 75×12×8
S - Specify

# High Power Single Mode Standard Coupler 9xx~20xxnm 20~50W

Spec No.: CAT-03-016B Date:

## Specifications

| Parameter \ Wavelength | | 980±10,1030±10,1060±10nm | 1310,1480,1550±20nm | 1940,2000±20nm |
|---|---|---|---|---|
| Max. IL(dB) | CR | | | |
| | 50/50 | 3.6 | 3.5 | 3.7 |
| | 40/60 | 4.6/2.8 | 4.5/2.7 | 4.9/2.9 |
| | 30/70 | 5.9/2.2 | 5.8/2.0 | 6.0/2.2 |
| | 20/80 | 7.9/1.5 | 7.7/1.3 | 7.9/1.6 |
| | 10/90 | 11/0.9 | 10.85/0.75 | 11.2/0.95 |
| | 5/95 | 14.5/0.6 | 14/0.45 | 14.5/0.65 |
| | 3/97 | 16.5/0.5 | 16.35/0.35 | 17.0/0.55 |
| | 2/98 | 18.4/0.45 | 18.25/0.35 | 18.5/0.55 |
| | 1/99 | 21.8/0.4 | 21.5/0.3 | 22.0/0.5 |
| | 0.1/99.9 | 28～32/0.4 | 28～32/0.3 | 28～32/0.5 |
| Max. PDL(dB) | CR≥30% | 0.1 | 0.1 | 0.1 |
| | 30%＞CR≥1% | 0.15 | 0.15 | 0.15 |
| | CR＜1% | NA | | |
| Min. Return Loss (dB) | | 50 | | |
| Min. Directivity (dB) | | 50 | | |
| Max. Power handling (W) | | 1, 5, 10, 20 | | |
| Operating temperature(℃) | | -5～75 | | |
| Storage temperature (℃) | | -40～85 | | |
| Fiber type | | HI1060 Fiber, HI1060 Flex Fiber | SMF-28e Fiber | SMF-28e Fiber, SM1950 Fiber |
| Dimension:(mm) | Power handling 10W | Ø3×56 | | |
| | Power handling 20W | 75×12×8 | | |

*Above specifications are for device without connector.

*For devices with connectors, IL should be 0.3dB(1310~1550) or 0.5dB(980~1060) or 0.3dB(1940~2000) higher, and RL will be 5dB lower,Max.

Power handling only 1W.

*Port Mark with Digital labeling.

* The material must be RoHS compliant.

## Package Dimensions


Optical Path: Port 3 to Port 1/2, Port 2 is Tap Port.
Mark: Port 1(Red) Port 2/3(Clear) for 250um Bare Fiber, 10cm to componer extend 10cm length color mark;
Port 1(Red) Port 2(Blue)Port 3(Black) for 900um Loose Tube;


Optical Path: Port 3 to Port 1/2, Port 1 is Tap Port;
Port 4 to Port 1/2, Port 2 is Tap Port.
Mark: Port 1(Red)Port 4(Black) Port 2/3(Clear) for 250um Bare Fiber, 10cm to component extend 10cm length color mark;
Port 1(Red) Port 2(Blue) Port 3(White) Port 4(Black) for 900um Loose Tube;

## Ordering Information

**HPSMC-①①-②-③③-④④-⑤⑤⑤⑤-⑥⑥⑥⑥-⑦-⑧⑧-⑨⑨**

①①: Wavelength
98 - 980nm
03 - 1030nm
06 - 1060nm
31 - 1310nm
55 - 1550nm
19- 1940nm
20 - 2000nm
SS - Specify

②: Port
1 - 1X2
2 - 2X2

③③: Coupling Ratio
0.1 - 0.1/99.9
01 - 1/99
02 - 2/98
03 - 3/97
05 - 5/95
10 - 10/90
20 - 20/80
30 - 30/70
40 - 40/60
50 - 50/50
SS - Specify

④④:Max. Power handling (W)
01 - 1W
05 - 5W
10 - 10W
20 - 20W
S - Specify

⑤⑤⑤⑤: Connector Type
1B - FC/UPC
2B - FC/APC
3B - SC/UPC
4B - SC/APC
N - None
S - Specify

⑥⑥⑥⑥: Fiber Jacket
B -250um Bare Fiber
C - 900um Loose Tube(Red)
D - 900um Loose Tube(Blue)
E - 900um Loose Tube(Black)
F - 900um Loose Tube(White)

⑦: Fiber Length
1 - 1.0m
S - Specify

⑧⑧: Fiber Type
1E - HI1060 Fiber
20 - HI1060 Flex Fiber
09 - SMF-28e Fiber
29 - SM1950 Fiber

⑨⑨: Package
16 - Ø3×56
27 - 75×12×8

# Single Mode Standard Coupler 15xxnm 500mW

Spec No.: CAT-03-005F Date:

**Specifications**

| Parameters | Unit | Values | | | | | | | | |
|---|---|---|---|---|---|---|---|---|---|---|
| Center Wavelength | nm | 1310 or 1550 | | | | | | | | |
| Operating Wavelength Range | nm | ±20 | | | | | | | | |
| Coupling Ratio | % | 1/99 | 2/98 | 3/97 | 5/95 | 10/90 | 20/80 | 30/70 | 40/60 | 50/50 |
| Max. Insertion Loss (Tap/Through Port) | dB | 21.5/0.2 | 18.5/0.3 | 16.5/0.3 | 14.6/0.4 | 10.8/0.6 | 7.4/1.2 | 5.6/1.8 | 4.4/2.5 | 3.4 |
| Max. PDL (Tap/Through Port) | dB | 0.3/0.05 | 0.3/0.05 | 0.3/0.05 | 0.3/0.05 | 0.25/0.05 | 0.25/0.05 | 0.25/0.05 | 0.25/0.05 | 0.1 |
| Min. Return Loss | dB | 50 | | | | | | | | |
| Min. Directivity | dB | 50 | | | | | | | | |
| Max. Optical Power (CW) | mW | 500 | | | | | | | | |
| Max. Tensile Load | N | 5 | | | | | | | | |
| Thermal Stability | dB/°C | ≤ 0.002 over -5 °C to +70 °C | | | | | | | | |
| Operating Temperature | °C | -5 to + 70 | | | | | | | | |
| Storage Temperature | °C | -40 to + 85 | | | | | | | | |
| Fiber Type | - | SMF-28e Fiber | | | | | | | | |
| Package Dimensions | mm | 250um Bare Fiber | | | | Ø3.0X40 | | | | |
| | | 900um Loose Tube | | | | Ø3.0X56 | | | | |
| | | 3mm Loose Cable | | | | 90X16X9 | | | | |

*Above specifications are for device without connector.

*For devices with connectors, IL will be 0.3dB higher and RL will be 5dB lower.

* The material must be RoHS compliant.

***Package Dimensions***


Optical Path: Port 3 to Port 1/2, Port 2 is Tap Port.
Mark: Port 1(Red) Port 2/3(Clear) for 250um Bare Fiber, 10cm to component extend 10cm length color mark;
Port 1(Red) Port 2(Blue)Port 3(Black) for 900um Loose Tube;
Port 1(Red) Other is cable color for 3mm Yellow cable, 10cm to component extend 10cm length color mark.

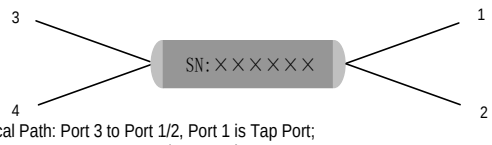


Optical Path: Port 3 to Port 1/2, Port 1 is Tap Port;
Port 4 to Port 1/2, Port 2 is Tap Port.
Mark: Port 1(Red)Port 4(Black) Port 2/3(Clear) for 250um Bare Fiber, 10cm to component extend 10cm length color mark;
Port 1(Red) Port 2(Blue) Port 3(White) Port 4(Black) for 900um Loose Tube;
Port 1(Red)Port 4(Black) Other is cable color for 3mm Yellow cable, 10cm to component extend 10cm length color mark.

**Ordering Information**

**SMC-①①-②-③③-④④④④-⑤⑤⑤⑤-⑥-⑦⑦-⑧⑧**

①①: Wavelength
31 - 1310nm
55 - 1550nm
SS - Specify

②: Port
1 - 1X2
2 - 2X2

③③: Coupling Ratio
01 - 1/99
02 - 2/98
03 - 3/97
05 - 5/95
10 - 10/90
20 - 20/80
30 - 30/70
40 - 40/60
50 - 50/50
SS - Specify

④④④④: Connector Type
1B - FC/UPC
2B - FC/APC
3B - SC/UPC
4B - SC/APC
N - None
S - Specify

⑤⑤⑤⑤: Fiber Jacket
B -250um Bare Fiber
C - 900um Loose Tube(Red)
D - 900um Loose Tube(Blue)
E - 900um Loose Tube(Black)
F - 900um Loose Tube(White)
T - 3mm松套管(黄色)

⑥: Fiber Length
1 - 1.0m
S - Specify

⑦⑦:Fiber Type
09 - SMF-28e Fiber

⑧⑧:Package Dimensions
14 - Ø3.0X40
16 - Ø3.0X56
29 - 90x16x9

# High Power Muti-Mode Standard Coupler

Spec No.: CAT-03-014B Date:

## Specifications

| Parameter \ Wavelength | | 915,975±15nm |
|---|---|---|
| Max. IL(dB) | CR | |
| | 50/50 | 4 |
| | 40/60 | 5.0/3.0 |
| | 30/70 | 6.3/2.4 |
| | 20/80 | 8.1/1.8 |
| | 10/90 | 11.6/1.2 |
| | 5/95 | 15.0/1.0 |
| | 3/97 | 16.5/0.95 |
| | 2/98 | 18.6/0.9 |
| | 1/99 | 21.5/0.8 |
| Min. Return Loss (dB) | | 40 |
| Max. Power handling (W) | | 1, 5, 10, 20, 30 |
| Operating temperature(℃) | | -5～75 |
| Storage temperature (℃) | | -40～85 |
| Fiber type | | 105/125 0.15NA or 0.22NA |
| Dimension: | Power handling 5W | Ø3×56 |
| | Power handling 30W | 75×12×8 |

*Above specifications are for device without connector.

*For devices with connectors, IL should be 0.3dB higher, and RL will be 20dB lower,Max. Power handling only 1W.

*Port Mark with Digital labeling.

* The material must be RoHS compliant.

## Package Dimensions


Optical Path: Port 3 to Port 1/2, Port 2 is Tap Port.
Port 1(Red) Port 2(Blue)Port 3(Black) for 900um Loose Tube;


Optical Path: Port 3 to Port 1/2, Port 1 is Tap Port;
Port 4 to Port 1/2, Port 2 is Tap Port.
Port 1(Red) Port 2(Blue) Port 3(White) Port 4(Black) for 900um Loose Tube;

## Ordering Information

**HMMC-①①-②-③③-④④-⑤⑤⑤⑤-⑥⑥⑥⑥-⑦-⑧⑧-⑨⑨**

①①: Wavelength
91 - 915nm
97 - 975nm
S - Specify

②: Port
1 - 1X2
2 - 2X2

③③: Coupling Ratio
01 - 1/99
02 - 2/98
03 - 3/97
05 - 5/95
10 - 10/90
20 - 20/80
30 - 30/70
40 - 40/60
50 - 50/50
S - Specify

④④: Max. Power handling (W)
01 - 1W
05 - 5W
10 - 10W
20 - 20W
30 - 30W

⑤⑤⑤⑤: Connector Type
1B - FC/UPC
2B - FC/APC
3B - SC/UPC
4B - SC/APC
N - None
S - Specify

⑥⑥⑥⑥: Fiber Jacket
B - 250um Fiber

⑦: Fiber Length
1 - 1.0m
S - Specify

⑧⑧: Fiber Type
07 - MM-S105/125-22A Fiber
08 - MM-S105/125-15A Fiber
S - Specify

⑨⑨: Package
27- 75×12×8
16 - Ø3.0×56

# Polarization Maintaining FWDM 980/1550nm 300mW

Spec No.: CAT-09-032D Date:

**Specifications**

| Parameters | | Unit | Values |
|---|---|---|---|
| Pass Band | Wavelength Range | nm | 1520~1580 |
| | Max. Insertion Loss | dB | 0.7 |
| | Typ. Insertion Loss | dB | 0.5 |
| | Min. Isolation | dB | 25 |
| | Typ. Isolation | dB | 30 |
| Reflection Band | Wavelength Range | nm | 960~990 |
| | Max. Insertion Loss | dB | 0.6 |
| | Typ. Insertion Loss | dB | 0.4 |
| | Min. Isolation | dB | 12 |
| | Typ. Isolation | dB | 15 |
| Min. Return Loss | | dB | 50 |
| Min. Directivity(over 960~990nm) | | dB | 60 |
| Min. Extinction Ratio | | dB | 20 |
| Typ. Extinction Ratio | | dB | 22 |
| Thermal Stability | | dB/℃ | ≤0.005 |
| Max. Optical Power (CW) | | mW | 500 |
| Max. Tensile Load | | N | 5 |
| Fiber Type | | - | PM 1550 Panda Fiber for Port 1/3, Hi 1060 Fiber for Port 2 |
| Operating Temperature | | ℃ | -5 to +70 |
| Storage Temperature | | ℃ | -40 to +85 |

*Above specifications are for device without connector.

*For devices with connectors, IL will be 0.3dB higher, ER will be 2dB lower and RL will be 5dB lower.

*The PM fiber and the connector key are aligned to the slow axis.

*The material must be RoHS compliant.

**Package Dimensions**

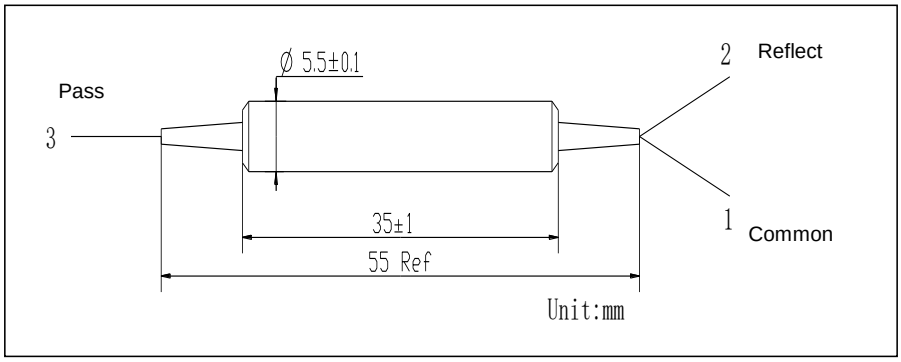


**Ordering Information**

**PMFWDM**-①①①①-②②-③③③-④④④-⑤-⑥⑥-⑦⑦

①①①①: Wavelength
5598 - 1550nm Pass / 980nm Reflect

②②:Handling Power
0.5 - 500mW

③③③: Connector Type on Port 1, 2 & 3
1A - FC/UPC
2A - FC/APC
3D - SC/UPC
4D - SC/APC
N - None
S - Specify

④④④: Fiber Jacket on Port 1, 2 & 3
B - 250um Bare Fiber
C - 900um Loose Tube(Red)
D- 900um Loose Tube(Blue)
F- 900um Loose Tube(White)
S - Specify

⑤: Fiber Length
0.8 - 0.8m
S - Specify

⑥⑥: Fiber Type
04A - PM 1550 for 1/3, Hi 1060 for 2
05A - PM 1550 for 1/3, PM 980 for 2
06A - PM 1550 for 3, PM 980 for 1&2

⑦⑦: Package
01 - Ø5.5x35mm
08 - 80*12*10

# FWDM 980/1550nm 1310/1550nm 1480/1550nm 1510/1550nm 300mW

Spec No.:CAT-04-010D Date:

**Specifications**

| Parameters | | Unit | Values | | | |
|---|---|---|---|---|---|---|
| Pass Band | Wavelength Range | nm | 1270-1350 (1530-1600) | 1450-1490 (1530-1580) | 1500-1520 (1530-1570) | 950-1010 (1500-1600) |
| | Typ. Insertion Loss | dB | 0.4 | 0.4 | 0.5 | 0.5 |
| | Max. Insertion Loss | dB | 0.6 | 0.6 | 0.7 | 0.7 |
| | Typ. Isolation | dB | 35 | 30 | 35 | 35 |
| | Min. Isolation at 23℃ | dB | 30 | 25 | 30 | 30 |
| Reflection Band | Wavelength Range | nm | 1530-1600 (1270-1350) | 1530-1580 (1450-1490) | 1530-1570 (1500-1520) | 1500-1600 (950-1010) |
| | Typ. Insertion Loss | dB | 0.3 | | | |
| | Max. Insertion Loss | dB | 0.5 | | | |
| | Typ. Isolation | dB | 15 | | | |
| | Min. Isolation at 23℃ | dB | 12 | | | |
| Min. Optical Return Loss | | dB | 50 | | | |
| Max. PDL | | dB | 0.1 | | | |
| Typ. PDL | | dB | 0.05 | | | |
| Thermal Stability | | dB/℃ | ≤0.005 | | | |
| Max. Optical Power (CW) | | mW | 500 | | | |
| Max. Tensile Load | | N | 5 | | | |
| Fiber Type | | | SMF-28e Fiber for all ports | SMF-28e Fiber for all ports | SMF-28e Fiber for all ports | SMF-28e Fiber for pass port; HI 1060 Fiber for common and reflect ports. |
| Operating Temperature | | ℃ | -5 to +70 | | | |
| Storage Temperature | | ℃ | -40 to +85 | | | |

*Above specifications are for device without connector.

*For devices with connectors, IL will be 0.3dB higher and RL will be 5dB lower.

**Package Dimensions**

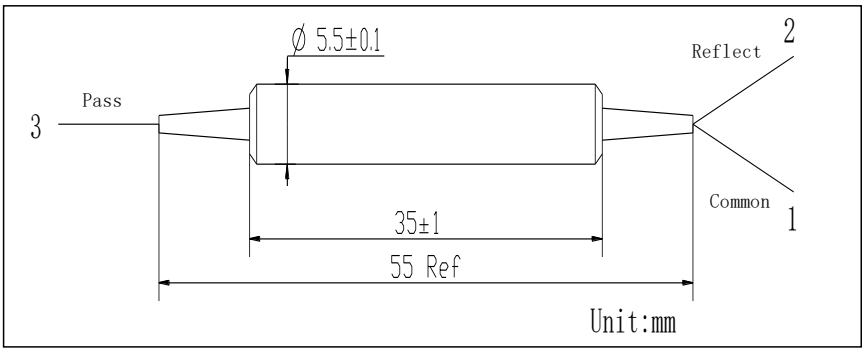


**Ordering Information**

**FWDM**-①①①①-②②-③③③-④④④-⑤-⑥⑥-⑦⑦

①①①①: Wavelength
3155 - 1310nm Pass / 1550nm Reflect
5531 - 1550nm Pass / 1310nm Reflect
4855 - 1480nm Pass / 1550nm Reflect
5548 - 1550nm Pass / 1480nm Reflect
5155 - 1510nm Pass / 1550nm Reflect
5551 - 1550nm Pass / 1510nm Reflect
5598 - 1550nm Pass / 980nm Reflect

②②: Handling Power
01 - 1W
0.5 - 0.5W
SS - Specify

③③③: Connector Type on Port 1, 2 & 3
1A - FC/UPC
2A - FC/APC(Step)
3A - SC/UPC
N - None
S - Specify

④④④: Fiber Jacket on Port 1, 2 & 3
B - 250um Fiber
F - 900um Loose Tube(White)
S - Specify

⑤: Fiber Length
1 - 1.0m
S - Specify

⑥⑥: Fiber Type
01-SMF-28e
05 - Pump&Common Hi1060，Signal SMF-28e

⑦⑦：Package Dimensions
01 - Ø5.5x35
02 - Ø5.5x40
03 - Ø5.5x50

# High Power Polarization Maintaining FWDM 980/1550nm 10W

Spec No.: CAT-05-048C Date:

**Specifications**

| Parameters | | Unit | Values |
|---|---|---|---|
| Pass Band | Wavelength Range | nm | 1520~1580 |
| | Max. Insertion Loss | dB | 0.9 |
| | Typ. Insertion Loss | dB | 0.7 |
| | Min. Isolation | dB | 25 |
| | Typ. Isolation | dB | 30 |
| Reflection Band | Wavelength Range | nm | 960~990 |
| | Max. Insertion Loss | dB | 0.8 |
| | Typ. Insertion Loss | dB | 0.6 |
| | Min. Isolation | dB | 12 |
| | Typ. Isolation | dB | 15 |
| Min. Return Loss | | dB | 50 |
| Min. Directivity(over 960~990nm) | | dB | 60 |
| Min. Extinction Ratio | | dB | 20 |
| Typ. Extinction Ratio | | dB | 22 |
| Thermal Stability | | dB/℃ | ≤0.005 |
| Max. Optical Power (CW) | | W | 1, 2, 3 or Specify |
| Max. Peak Power for ns Pulse | | kW | 10 |
| Max. Tensile Load | | N | 5 |
| Fiber Type | | | PM 1550 Panda Fiber for Port 1/3, Hi 1060 Fiber for Port 2 |
| Operating Temperature | | ℃ | -5 to +70 |
| Storage Temperature | | ℃ | -40 to +85 |

*Above specifications are for device without connector.

*For devices with connectors, IL will be 0.3dB higher, RL will be 5dB lower , ER will be 2dB lower and optical power is only 1000mW(CW).

*The PM fiber and the connector key are aligned to the slow axis.

*The material must be RoHS compliant.

**Package Dimensions**

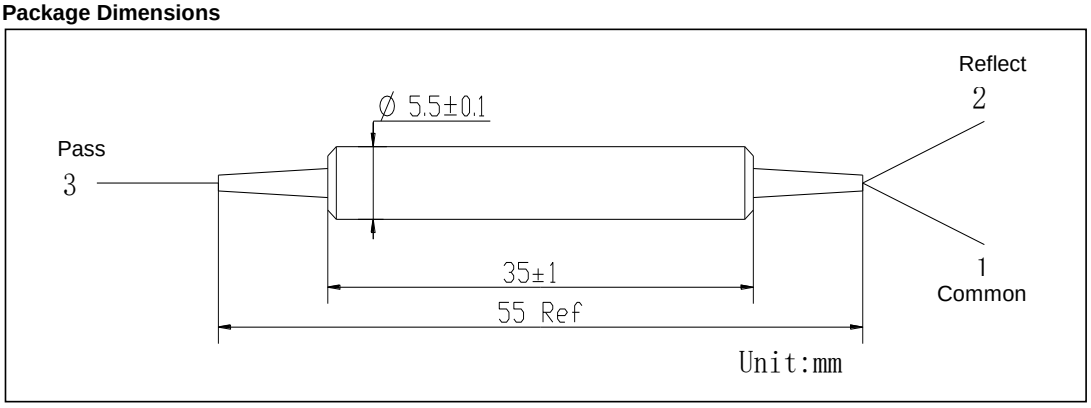


**Ordering Information**

**HPMFWDM**-①①①①-②②-③③③-④④④-⑤-⑥⑥-⑦⑦

①①①①: Wavelength
5598 - 1550nm Pass / 980nm Reflect

②②:Handling Power
0.5 - 500mW

③③③: Connector Type on Port 1, 2 & 3
1B - FC/UPC
2B - FC/APC
3D - SC/UPC
4D - SC/APC
N - None
S - Specify

④④④: Fiber Jacket on Port 1, 2 & 3
B - 250um Bare Fiber
C - 900um Loose Tube(Red)
D- 900um Loose Tube(Blue)
F- 900um Loose Tube(White)
S - Specify

⑤: Fiber Length
0.8 - 0.8m
S - Specify

⑥⑥: Fiber Type
04B - PM 1550 for 1/3, Hi 1060 for 2
05B - PM 1550 for 1/3, PM 980 for 2
06B - PM 1550 for 3, PM 980 for 1&2

⑦⑦: Package
01 - Ø5.5x35mm
08 - 80*12*10

# High Power Polarization Maintaining FWDM 976/1064nm 300mW~10W (For Ultrafast)

Design for Ultra-Fast Laser

Spec No.: CAT-11-001B Date:

**Specifications**

| Parameters | | Unit | Values | |
|---|---|---|---|---|
| Pass Band | Wavelength Range | nm | 960~990 | 1020~1080 |
| | Max. Insertion Loss | dB | 0.9 | |
| | Typ. Insertion Loss | dB | 0.7 | |
| | Min. Isolation | dB | 25 | |
| | Typ. Isolation | dB | 30 | |
| Reflection Band | Wavelength Range | nm | 1020~1080 | 960~990 |
| | Max. Insertion Loss | dB | 0.7 | |
| | Typ. Insertion Loss | dB | 0.5 | |
| | Min. Isolation | dB | 12 | |
| | Typ. Isolation | dB | 15 | |
| Min. Return Loss | | dB | 50 | |
| Min. Extinction Ratio | | dB | 20 | |
| Typ. Extinction Ratio | | dB | 22 | |
| Min. Directivity (over Reflection Band) | | dB | 55 | |
| Thermal Stability | | dB/℃ | ≤0.005 | |
| Signal Handling Power | | - | Pulse Width: ps,fs;<br>Pulse Energy: nJ;<br>Peak Power: 0.5KW,1KW,10KW,20KW and so on. | |
| Max. Tensile Load | | N | 5 | |
| Fiber Type | | | PM 980 Panda Fiber | |
| Operating Temperature | | ℃ | -5 to +70 | |
| Storage Temperature | | ℃ | -40 to +85 | |

*Above specifications are for device without connector.

*For devices with connectors, IL will be 0.5dB higher, RL will be 5dB lower and ER will be 2dB lower.

*The PM fiber and the connector key are aligned to the slow axis.

*In this device,both axes is working.

*The material must be RoHS compliant.

**Package Dimensions**

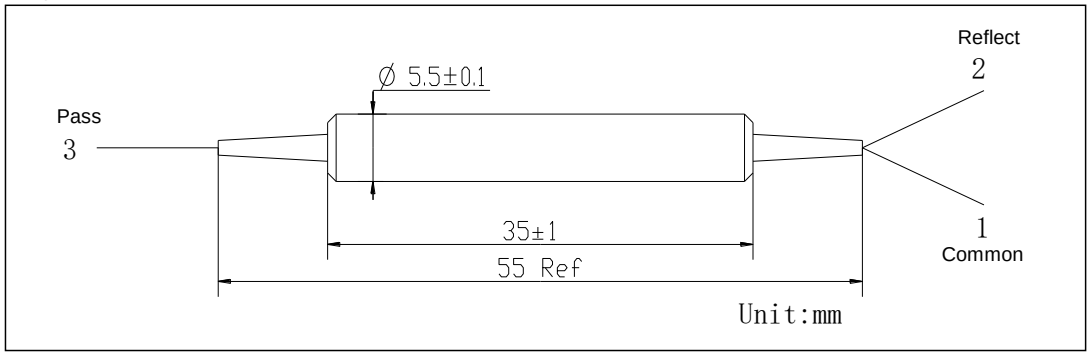


**Ordering Information**

**HPMFWDM-UF**-①①①①-②②-③③-④④④-⑤⑤⑤-⑥-⑦⑦-⑧⑧

①①①①: Wavelength
9806 - 980nm Pass / 1020~1080nm Reflect
0698 - 1020~1080nm Pass / 980nm Reflect

②②: Pump Handling Power
0.5- 0.5W
01 - 1W
S - Specify

③③: Signal Average Power
01 - 01W
SS - Specify

④④④: Connector Type on Port 1, 2 & 3
1A - FC/UPC
2A - FC/APC(Step)
N - None
S - Specify

⑤⑤⑤: Fiber Jacket on Port 1, 2 & 3
B - 250um Bare Fiber
C - 900um Loose Tube(Red)
D- 900um Loose Tube(Blue)
F- 900um Loose Tube(White)
S - Specify

⑥: Fiber Length
0.8 - 0.8m
S - Specify

⑦⑦: Fiber Type
01A - PM 980
03A - Hi1060 on 980 Port,
PM 980 on other Ports

⑧⑧: Package
01 - Ø5.5x35mm

# High Power Polarization Maintaining FWDM 976/1064nm 300mW~10W

Spec No.: CAT-05-049C Date:

**Specifications**

| Parameters | | Unit | Values |
|---|---|---|---|
| Pass Band | Wavelength Range | nm | 960~990 (1020~1080) |
| | Max. Insertion Loss | dB | 0.9 |
| | Typ. Insertion Loss | dB | 0.7 |
| | Min. Isolation | dB | 25 |
| | Typ. Isolation | dB | 30 |
| Reflection Band | Wavelength Range | nm | 1020~1080 (960~990) |
| | Max. Insertion Loss | dB | 0.7 |
| | Typ. Insertion Loss | dB | 0.5 |
| | Min. Isolation | dB | 12 |
| | Typ. Isolation | dB | 15 |
| Min. Return Loss | | dB | 50 |
| Min. Extinction Ratio | | dB | 20 |
| Typ. Extinction Ratio | | dB | 22 |
| Min. Directivity (over Reflection Band) | | dB | 55 |
| Thermal Stability | | dB/℃ | ≤0.005 |
| Max. Optical Power (CW) | | W | 1, 2, 3 or Specify |
| Max. Peak Power for ns Pulse | | kW | 10 |
| Max. Tensile Load | | N | 5 |
| Fiber Type | | | PM 980 Panda Fiber |
| Operating Temperature | | ℃ | -5 to +70 |
| Storage Temperature | | ℃ | -40 to +85 |

*Above specifications are for device without connector.

*For devices with connectors, IL will be 0.3dB higher, RL will be 5dB lower , ER will be 2dB lower and optical power is only 1000mW(CW).

*The PM fiber and the connector key are aligned to the slow axis.

*The material must be RoHS compliant.

**Package Dimensions**

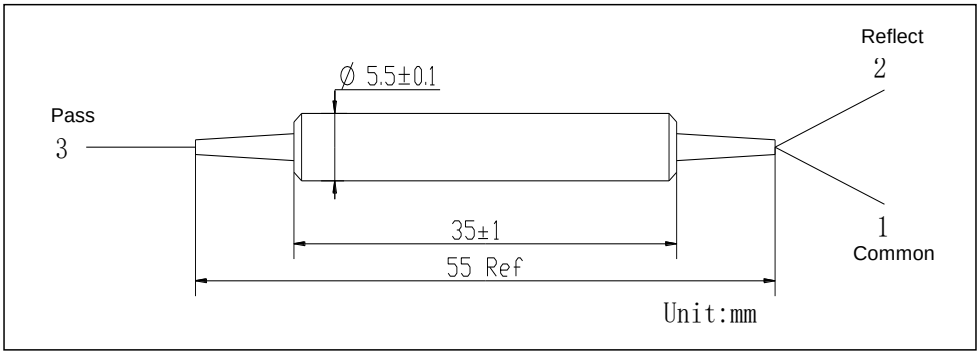


**Ordering Information**

**HPMFWDM**-①①①①-②②-③③③-④④④-⑤-⑥⑥-⑦⑦

①①①①: Wavelength
9806 - 980nm Pass / 1064nm Reflect
0698 - 1064nm Pass / 980nm Reflect
9803 - 980nm Pass / 1030nm Reflect
0398 - 1030nm Pass / 980nm Reflect

②②②: Handling Power
01 - 1W
02 - 2W
03 - 3W
S - Specify

③③③: Connector Type on Port 1, 2 & 3
1B - FC/UPC
2B - FC/APC
3D - SC/UPC
4D - SC/APC
N - None
S - Specify

④④④: Fiber Jacket on Port 1, 2 & 3
B - 250um Bare Fiber
C - 900um Loose Tube(Red)
D- 900um Loose Tube(Blue)
F- 900um Loose Tube(White)
S - Specify

⑤: Fiber Length
0.8 - 0.8m
S - Specify

⑥⑥: Fiber Type
01B - PM 980
02 - Nufern PM 1060L
03B - Hi1060 on 980 Port, PM 980 on other Ports

⑦⑦: Package
01 - Ø5.5x35mm
08 - 80*12*10

# High Power FWDM 980/1550nm 1310/1550nm 1480/1550nm 1510/1550nm 10W

Spec No.: CAT-05-041C Date:

**Specifications**

| Parameters | | Unit | Values | | | |
|---|---|---|---|---|---|---|
| Pass Band | Wavelength Range | nm | 1270-1350 (1530-1600) | 1450-1490 (1530-1580) | 1500-1520 (1530-1570) | 950-1010 (1500-1600) |
| | Typ. Insertion Loss | dB | 0.6 | 0.6 | 0.7 | 0.7 |
| | Max. Insertion Loss | dB | 0.8 | 0.8 | 0.9 | 0.9 |
| | Typ. Isolation | dB | 35 | 30 | 35 | 35 |
| | Min. Isolation at 23℃ | dB | 30 | 25 | 30 | 30 |
| Reflection Band | Wavelength Range | nm | 1530-1600 (1270-1350) | 1530-1580 (1450-1490) | 1530-1570 (1500-1520) | 1500-1600 (950-1010) |
| | Typ. Insertion Loss | dB | 0.5 | | | |
| | Max. Insertion Loss | dB | 0.7 | | | |
| | Typ. Isolation | dB | 15 | | | |
| | Min. Isolation at 23℃ | dB | 12 | | | |
| Min. Optical Return Loss | | dB | 50 | | | |
| Max. PDL | | dB | 0.1 | | | |
| Typ. PDL | | dB | 0.05 | | | |
| Thermal Stability | | dB/℃ | ≤0.005 | | | |
| Max. Optical Power (CW) | | W | 1, 2, 3 or Specify | | | |
| Max. Peak Power for ns Pulse | | kW | 10 | | | |
| Max. Tensile Load | | N | 5 | | | |
| Fiber Type | | | SMF-28e Fiber for all ports | | | SMF-28e Fiber for pass port;HI 1060 Fiber for common and reflect ports. |
| Operating Temperature | | ℃ | -5 to +70 | | | |
| Storage Temperature | | ℃ | -40 to +85 | | | |

*Above specifications are for device without connector.

*For devices with connectors, IL will be 0.3dB higher and RL will be 5dB lower and optical power is only 1000mW(CW).

*SMF-28e Fiber is used for 1550nm interface and HI 1060 Fiber is used for 980nm channel.

**Package Dimensions**

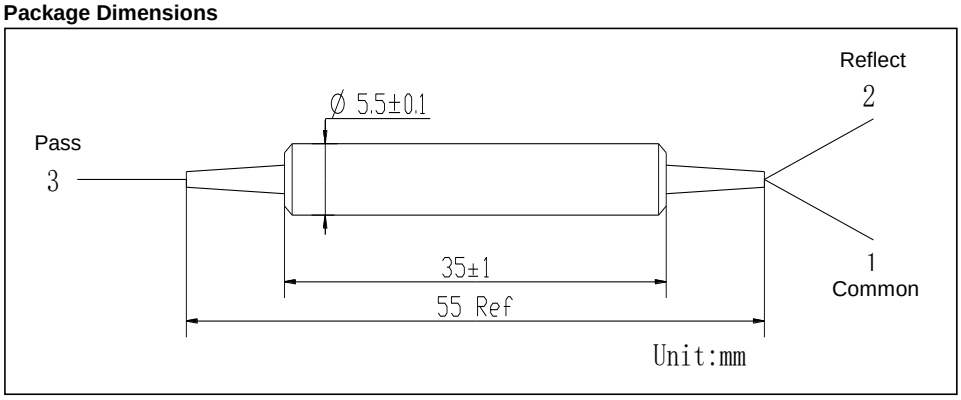


**Ordering Information**

**HPFWDM**-①①①①-②②-③③③-④④④-⑤-⑥⑥-⑦⑦

①①①①: Wavelength

3155 - 1310nm Pass / 1550nm Reflect

5531 - 1550nm Pass / 1310nm Reflect

4855 - 1480nm Pass / 1550nm Reflect

5548 - 1550nm Pass / 1480nm Reflect

5155 - 1510nm Pass / 1550nm Reflect

5551 - 1550nm Pass / 1510nm Reflect

5598 - 1550nm Pass / 980nm Reflect

②②: Handling Power

05 - 5W

10 - 10W

SS - Specify

③③③: Connector Type on Port 1, 2 & 3

1B - FC/UPC

2B - FC/APC(Step)

N - None

S - Specify

④④④: Fiber Jacket on Port 1, 2 & 3

B - 250um Fiber

C - 900um Loose Tube(Red)

F - 900um Loose Tube(White)

S - Specify

⑤: Fiber Length

1 - 1.0m

⑥⑥: Fiber Type

01 - SMF-28e

05 - Pump&Common Hi1060，Signal SMF-28e

S - Specify

⑦⑦：Package Dimensions

X - No Package

01 - Ø5.5x35

# High Power FWDM 980/1550nm 1310/1550nm 1480/1550nm 1510/1550nm 10W

Spec No.: CAT-05-043C Date:

**Specifications**

| Parameters | | Unit | Values | | | |
|---|---|---|---|---|---|---|
| Pass Band | Wavelength Range | nm | 1270-1350 | 1450-1490 | 1500-1520 | 950-1010 |
| | | | (1530-1600) | (1530-1580) | (1530-1570) | (1500-1600) |
| | Typ. Insertion Loss | dB | 0.6 | 0.6 | 0.7 | 0.7 |
| | Max. Insertion Loss | dB | 0.8 | 0.8 | 0.9 | 0.9 |
| | Typ. Isolation | dB | 35 | 30 | 35 | 35 |
| | Min. Isolation at 23℃ | dB | 30 | 25 | 30 | 30 |
| Reflection Band | Wavelength Range | nm | 1530-1600 | 1530-1580 | 1530-1570 | 1500-1600 |
| | | | (1270-1350) | (1450-1490) | (1500-1520) | (950-1010) |
| | Typ. Insertion Loss | dB | 0.5 | | | |
| | Max. Insertion Loss | dB | 0.7 | | | |
| | Typ. Isolation | dB | 15 | | | |
| | Min. Isolation at 23℃ | dB | 12 | | | |
| Min. Optical Return Loss | | dB | 50 | | | |
| Max. PDL | | dB | 0.1 | | | |
| Typ. PDL | | dB | 0.05 | | | |
| Thermal Stability | | dB/℃ | ≤0.005 | | | |
| Max. Optical Power (CW) | | W | 1, 2, 3 or Specify | | | |
| Max. Peak Power for ns Pulse | | kW | 10 | | | |
| Max. Tensile Load | | N | 5 | | | |
| Fiber Type | | | SM Fiber | | | |
| Operating Temperature | | ℃ | -5 to +70 | | | |
| Storage Temperature | | ℃ | -40 to +85 | | | |

*Above specifications are for device without connector.

*For devices with connectors, IL will be 0.3dB higher and RL will be 5dB lower and optical power is only 1000mW(CW).

*SMF-28e Fiber is used for 1550nm interface and HI 1060 Fiber is used for 980nm channel.

*The material must be RoHS compliant.

**Package Dimensions**

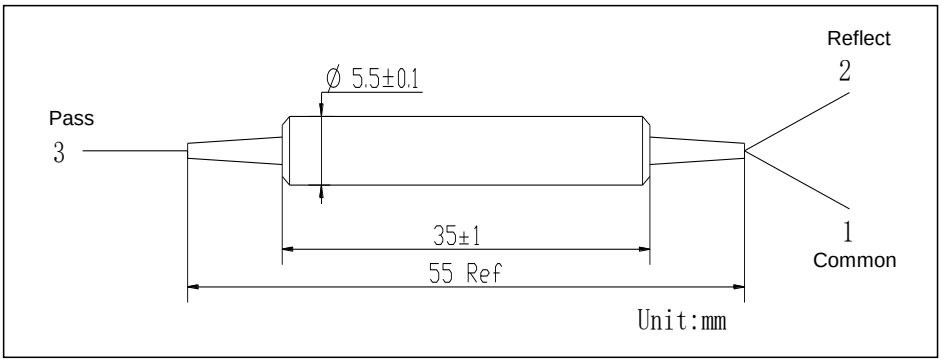


**Ordering Information**

**HPFWDM**-①①①①-②②-③③③-④④④-⑤-⑥⑥-⑦⑦

①①①①: Wavelength
3155 - 1310nm Pass / 1550nm Reflect
5531 - 1550nm Pass / 1310nm Reflect
4855 - 1480nm Pass / 1550nm Reflect
5548 - 1550nm Pass / 1480nm Reflect
5155 - 1510nm Pass / 1550nm Reflect
5551 - 1550nm Pass / 1510nm Reflect
9855 - 980nm Pass / 1550nm Reflect
5598 - 1550nm Pass / 980nm Reflect

②②: Handling Power
01 - 01W
SS - Specify

③③③: Connector Type on Port 1, 2 & 3
1A - FC/UPC
2A - FC/APC(Step)
3A - SC/UPC
N - None
S - Specify

④④④: Fiber Jacket on Port 1, 2 & 3
B - 250um Fiber
C - 900um Loose Tube(Red)
F - 900um Loose Tube(White)
S - Specify

⑤: Fiber Length
1 - 1.0m
S - Specify

⑥⑥: Fiber Type
01 - SMF-28e
05 - Pump&Common Hi1060，Signal SMF-28e
S - Specify

⑦⑦：Package Dimensions
01 - Ø5.5x35

# FWDM 976/1064nm 300mW

Spec No.: CAT-04-012C Date:

**Specifications**

| Parameters | | Unit | Values |
|---|---|---|---|
| Pass Band | Wavelength Range | nm | 960-990 |
| | Max. Insertion Loss | dB | 0.7 |
| | Typ. Insertion Loss | dB | 0.5 |
| | Typ. Isolation | dB | 30 |
| | Min. Isolation | dB | 25 |
| Reflection Band | Wavelength Range | nm | 1020-1080 |
| | Max. Insertion Loss | dB | 0.5 |
| | Typ. Insertion Loss | dB | 0.3 |
| | Typ. Isolation | dB | 15 |
| | Min. Isolation | dB | 13 |
| Optical Return Loss | | dB | 50 |
| Max. PDL | | dB | 0.1 |
| Typ. PDL | | dB | 0.05 |
| Thermal Stability | | dB/℃ | ≤0.005 |
| Max. Optical Power (CW) | | mW | 300 |
| Max. Tensile Load | | N | 5 |
| Fiber Type | | | HI 1060 fiber |
| Operating Temperature | | ℃ | -5 to +70 |
| Storage Temperature | | ℃ | -40 to +85 |

*Above specifications are for device without connector.

*For devices with connectors, IL will be 0.3dB higher, RL will be 5dB lower.

*The material must be RoHS compliant.

**Package Dimensions**

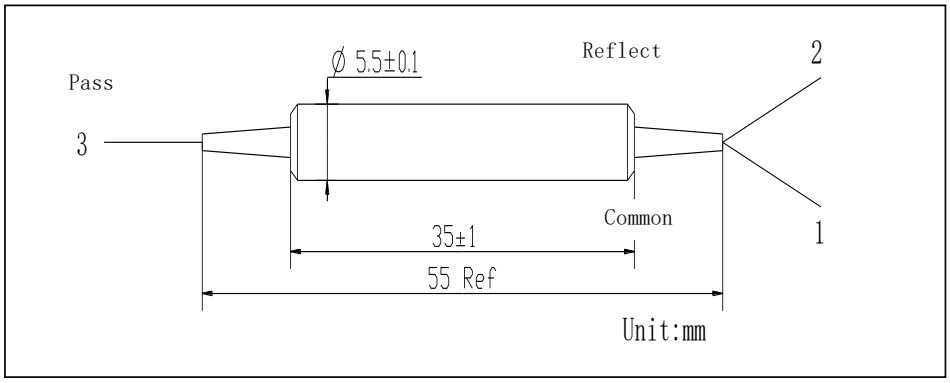


**Ordering Information**

**FWDM**-①①①①-②②-③③③-④④④-⑤-⑥⑥-⑦⑦

①: Wavelength
9806 - 980 Pass/1064 Reflect
9803 - 980 Pass/1030 Reflect

②②: Handling Power
0.3 - 300mW
S - Specify

③③③: Connector Type on Port 1, 2 & 3
1B - FC/UPC
2B - FC/APC
N - None
S - Specify

④④④: Fiber Jacket on Port 1, 2 & 3
B - 250um Bare Fiber
F- 900um Loose Tube(White)
S - Specify

⑤: Fiber Length
0.8 - 0.8m
S - Specify

⑥⑥: Fiber Type
02 - HI1060
10 - Nufern 1060-XP

⑦⑦: Package
01 - Ø5.5x35mm

# High Power FWDM 976/1064nm 10W

Spec No.: CAT-05-042C Date:

**Specifications**

| Parameters | | Unit | Values |
|---|---|---|---|
| Pass Band | Wavelength Range | nm | 960-990 |
| | Max. Insertion Loss | dB | 0.9 |
| | Typ. Insertion Loss | dB | 0.7 |
| | Typ. Isolation | dB | 30 |
| | Min. Isolation | dB | 25 |
| Reflection Band | Wavelength Range | nm | 1020-1080 |
| | Max. Insertion Loss | dB | 0.7 |
| | Typ. Insertion Loss | dB | 0.5 |
| | Typ. Isolation | dB | 15 |
| | Min. Isolation | dB | 13 |
| Optical Return Loss | | dB | 50 |
| Max. PDL | | dB | 0.1 |
| Typ. PDL | | dB | 0.05 |
| Thermal Stability | | dB/℃ | ≤0.005 |
| Max. Optical Power (CW) | | W | 1, 2, 3 or Specify |
| Max. Peak Power for ns Pulse | | kW | 10 |
| Max. Tensile Load | | N | 5 |
| Fiber Type | | | HI 1060 fiber |
| Operating Temperature | | ℃ | -5 to +70 |
| Storage Temperature | | ℃ | -40 to +85 |

*Above specifications are for device without connector.

*For devices with connectors, IL will be 0.5dB higher, RL will be 5dB lower and optical power is only 1000mW(CW).

**Package Dimensions**

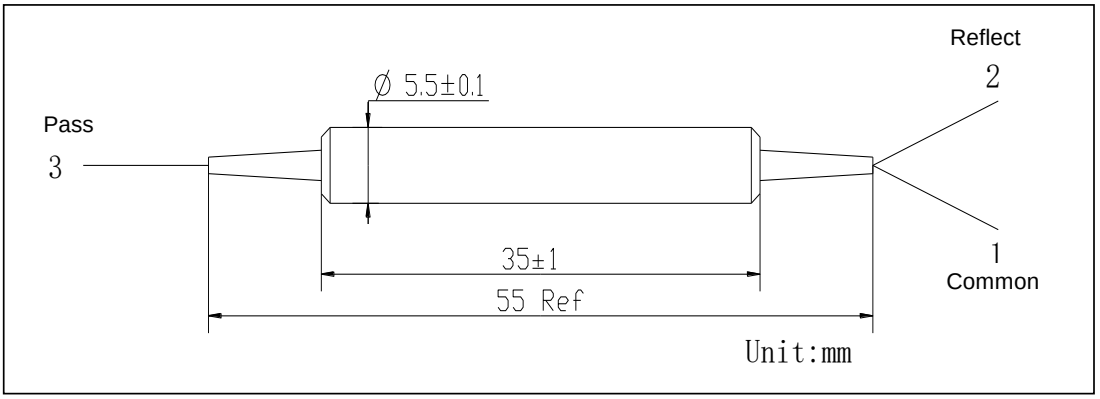


**Ordering Information**

**HPFWDM**-①①①①-②②-③③③-④④④-⑤-⑥⑥-⑦⑦

①①①①: Wavelength
9806 - 980 Pass/1064 Reflect

②②: Handling Power
01 - 1W
SS - Specify

③③③: Connector Type on Port 1, 2 & 3
1A - FC/UPC
2A - FC/APC(Step)
N - None
S - Specify

④④④: Fiber Jacket on Port 1, 2 & 3
B - 250um Fiber
C - 900um Loose Tube(Red)
F - 900um Loose Tube(White)
S - Specify

⑤: Fiber Length
1 - 1.0m
S - Specify

⑥⑥: Fiber Type
02 - HI1060
S - Specify

⑦⑦: Package Dimensions
01 - Ø5.5x35

# Polarization Maintaining FWDM 1310/1550nm 1480/1550nm 1510/1550nm 300mW

Spec No.: CAT-09-024D Date:

**Specifications**

| Parameters | | Unit | Values | | |
|---|---|---|---|---|---|
| Pass Band | Wavelength Range | nm | 1270-1350(1530-1600) | 1450-1490(1530-1600) | 1500-1520(1530-1570) |
| | Typ. Insertion Loss | dB | 0.4 | 0.4 | 0.5 |
| | Max. Insertion Loss | dB | 0.6 | 0.6 | 0.7 |
| | Typ. Isolation | dB | 30 | 30 | 30 |
| | Min. Isolation | dB | 25 | 25 | 25 |
| Reflect Band | Wavelength Range | nm | 1530-1600(1270-1350) | 1530-1600(1450-1490) | 1530-1570(1500-1520) |
| | Typ. Insertion Loss | dB | 0.3 | | |
| | Max. Insertion Loss | dB | 0.5 | | |
| | Typ. Isolation | dB | 15 | | |
| | Min. Isolation | dB | 12 | | |
| Min. Extinction Ratio | | dB | 20 | | |
| Min. Return Loss | | dB | 50 | | |
| Thermal Stability | | dB/℃ | ≤0.005 | | |
| Max. Optical Power (CW) | | mW | 500 | | |
| Max. Tensile Load | | N | 5 | | |
| Fiber Type | | | PM 1550 Panda Fiber | | |
| Operating Temperature | | ℃ | -5 to +70 | | |
| Storage Temperature | | ℃ | -40 to +85 | | |

*Above specifications are for device without connector.

*For devices with connectors, IL will be 0.3dB higher, RL will be 5dB lower and ER will be 2dB lower.

*The PM fiber and the key are aligned to the slow axis.

*The material must be RoHS compliant.

**Package Dimensions**

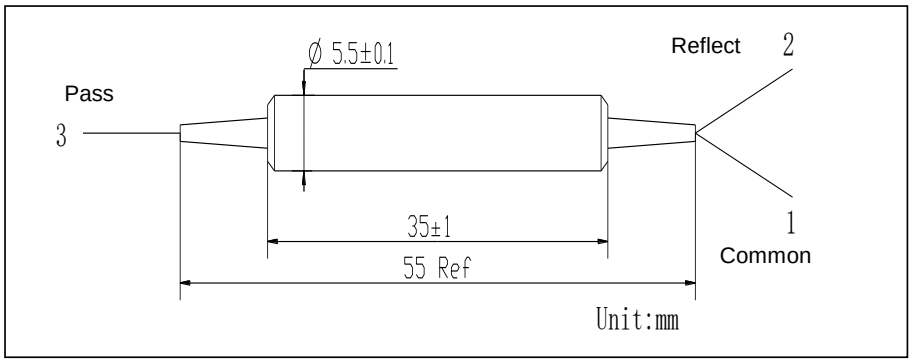


**Ordering Information**

**PMFWDM**-①①①①-②②-③③③-④④④-⑤-⑥⑥-⑦⑦

①①①①: Wavelength

3155 - 1310nm Pass / 1550nm Reflect

5531 - 1550nm Pass / 1310nm Reflect

4855 - 1480nm Pass / 1550nm Reflect

5548 - 1550nm Pass / 1480nm Reflect

5155 - 1510nm Pass / 1550nm Reflect

5551 - 1550nm Pass / 1510nm Reflect

②②:Handling Power

③③③: Connector Type on Port 1, 2 & 3

1A - FC/UPC

2A - FC/APC

3D - SC/UPC

4D - SC/APC

N - None

S - Specify

④④④: Fiber Jacket on Port 1, 2 & 3

⑤: Fiber Length

1 - 1.0m

S - Specify

⑥⑥: Fiber Type

09A - PM1550

⑦⑦: Package

01 - Ø5.5x35mm

# High Power Polarization Maintaining FWDM 1310/1550nm 1480/1550nm 1510/1550nm 10W

Spec No.: CAT-05-047C Date:

**Specifications**

| Parameters | | Unit | Values | | |
|---|---|---|---|---|---|
| Pass Band | Wavelength Range | nm | 1270-1350(1530-1600) | 1450-1490(1530-1600) | 1500-1520(1530-1570) |
| | Typ. Insertion Loss | dB | 0.6 | 0.6 | 0.7 |
| | Max. Insertion Loss | dB | 0.8 | 0.8 | 0.9 |
| | Typ. Isolation | dB | 30 | 30 | 30 |
| | Min. Isolation | dB | 25 | 25 | 25 |
| Reflection Band | Wavelength Range | nm | 1530-1600(1270-1350) | 1530-1600(1450-1490) | 1530-1570(1500-1520) |
| | Typ. Insertion Loss | dB | 0.5 | | |
| | Max. Insertion Loss | dB | 0.7 | | |
| | Typ. Isolation | dB | 15 | | |
| | Min. Isolation | dB | 12 | | |
| Min. Extinction Ratio | | dB | 20 | | |
| Min. Return Loss | | dB | 50 | | |
| Thermal Stability | | dB/℃ | ≤0.005 | | |
| Max. Optical Power (CW) | | W | 1, 2, 3 or Specify | | |
| Max. Peak Power for ns Pulse | | kW | 10 | | |
| Max. Tensile Load | | N | 5 | | |
| Fiber Type | | | PM Panda Fiber | | |
| Operating Temperature | | ℃ | -5 to +70 | | |
| Storage Temperature | | ℃ | -40 to +85 | | |

*Above specifications are for device without connector.

*For devices with connectors, IL will be 0.3dB higher, RL will be 5dB lower , ER will be 2dB lower and optical power is only 1000mW(CW).

*The PM fiber and the key are aligned to the slow axis.

*The material must be RoHS compliant.

**Package Dimensions**

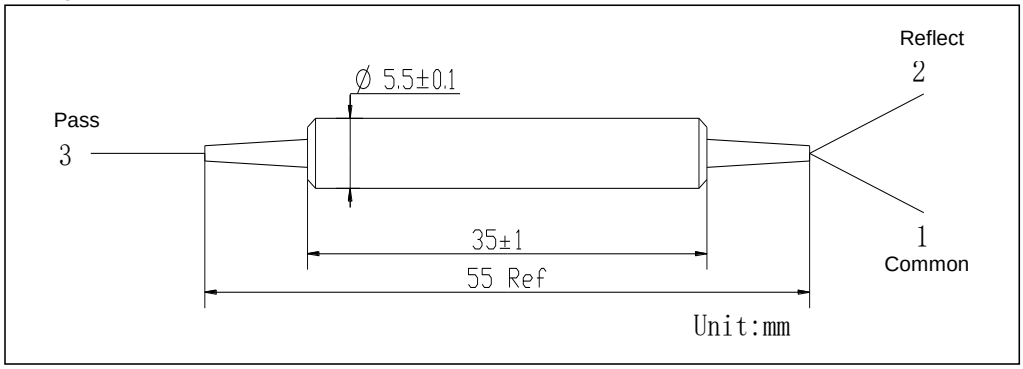


**Ordering Information**

**HPMFWDM**-①①①①-②②-③③③-④④④-⑤-⑥⑥-⑦⑦

①①①①: Wavelength
3155 - 1310nm Pass / 1550nm Reflect
5531 - 1550nm Pass / 1310nm Reflect
4855 - 1480nm Pass / 1550nm Reflect
5548 - 1550nm Pass / 1480nm Reflect
5155 - 1510nm Pass / 1550nm Reflect
5551 - 1550nm Pass / 1510nm Reflect

②②: Handling Power
01 - 1W
SS - Specify

③③③: Connector Type on Port 1, 2 & 3
1A - FC/UPC
2A - FC/APC
3D - SC/UPC
4D - SC/APC
N - None
S - Specify

④④④: Fiber Jacket on Port 1, 2 & 3
B - 250um Bare Fiber
C - 900um Loose Tube(Red)
D - 900um Loose Tube(Blue)
F - 900um Loose Tube(White)
S - Specify

⑤: Fiber Length
0.8 - 0.8m
S - Specify

⑥⑥: Fiber Type
09A - PM 1550
22A - PM 1550 for 1/3, SMF-28e for Reflect
23A - PM 1310

⑦⑦: Package
01 - Ø5.5x35mm
08 - 80*12*10

# Polarization Maintaining FWDM 1570/2000nm 300mW

Spec No.: CAT-10-016E Date:

**Specifications**

| Parameters | | Unit | Values | |
|---|---|---|---|---|
| Pass Band | Wavelength Range | nm | 1950~2050 | |
| | Max. Insertion Loss | dB | 0.8 | |
| | Typ. Insertion Loss | dB | 0.6 | |
| | Min. Isolation | dB | 25 | |
| | Typ. Isolation | dB | 30 | |
| Reflection Band | Wavelength Range | nm | 1550~1590 | |
| | Max. Insertion Loss | dB | 0.6 | 1.2 |
| | Typ. Insertion Loss | dB | 0.4 | 1 |
| | Min. Isolation | dB | 12 | |
| | Typ. Isolation | dB | 15 | |
| Min. Return Loss | | dB | 50 | |
| Min. Directivity(over 1550~1590nm) | | dB | 55 | |
| Min. Extinction Ratio | | dB | 18 | |
| Typ. Extinction Ratio | | dB | 20 | |
| Thermal Stability | | dB/℃ | ≤0.005 | |
| Max. Optical Power (CW) | | mW | 500 | |
| Max. Tensile Load | | N | 5 | |
| Fiber Type | | | PM 1550 Fiber , PM 1950 Fiber for All Ports | PM 1950 for Common & Pass, PM 1550 for Reflect |
| Operating Temperature | | ℃ | -5 to +70 | |
| Storage Temperature | | ℃ | -40 to +85 | |

*Above specifications are for device without connector.
*For devices with connectors, IL will be 0.3dB higher, ER will be 2dB lower and RL will be 5dB lower.
*The PM fiber and the connector key are aligned to the slow axis.
*The material must be RoHS compliant.

**Package Dimensions**

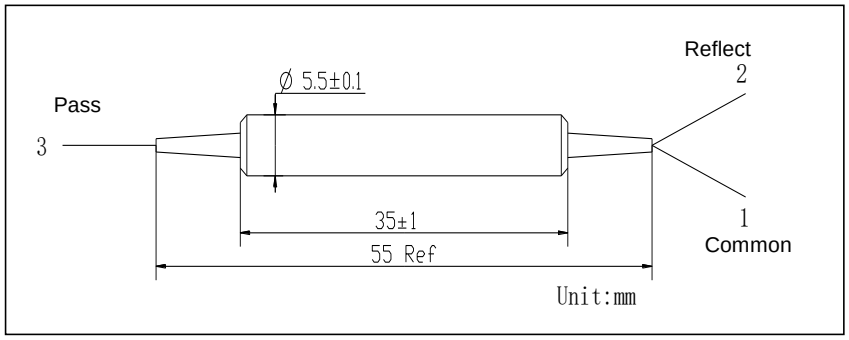


**PMFWDM**-①①①①-②②-③③-④④④-⑤⑤-⑥⑥-⑦

①①①①: Wavelength
2057 - 2000nm Pass / 1570nm Reflect
SSSS - Specify

②②: Handling Power
0.5 - 0.5W
SS - Specify

③③③: Connector Type on Port 1, 2 & 3
1A - FC/UPC
2A - FC/APC（Step）
N - None
S - Specify

④④④: Fiber Jacket on Port 1, 2 & 3
B - 250um Bare Fiber
C - 900um Loose Tube(Red)
F - 900um Loose Tube(White)
S - Specify

⑤⑤: Fiber Length
0.8 - 0.8m
S - Specify

⑥⑥: Fiber Type
09A - PM 1550 Fiber
20 - Nufern PM1950
21A - PM 1550 Fiber at Common & Reflect ports and PM 1950 Fiber at Pass port
37 - PM 1950 for Common & Pass, PM 1550 for Reflect

⑦: Package Size
01 - Ø5.5x35

# FWDM 1570/2000nm 300mW

Spec No.: CAT-10-012D Date:

**Specifications**

| Parameters | | Unit | Values |
|---|---|---|---|
| Pass Band | Wavelength Range | nm | 1950~2050 |
| | Max. Insertion Loss | dB | 0.8 |
| | Typ. Insertion Loss | dB | 0.6 |
| | Min. Isolation | dB | 25 |
| | Typ. Isolation | dB | 30 |
| Reflection Band | Wavelength Range | nm | 1550~1590 |
| | Max. Insertion Loss | dB | 0.6 |
| | Typ. Insertion Loss | dB | 0.4 |
| | Min. Isolation | dB | 12 |
| | Typ. Isolation | dB | 15 |
| Min. Return Loss | | dB | 50 |
| Min. Directivity(over 1550~1590nm) | | dB | 55 |
| Max. PDL | | dB | 0.1 |
| Typ. PDL | | dB | 0.05 |
| Thermal Stability | | dB/℃ | ≤0.005 |
| Max. Optical Power (CW) | | mW | 500 |
| Max. Tensile Load | | N | 5 |
| Fiber Type | | | SMF-28e Fiber or Specify |
| Operating Temperature | | ℃ | -5 to +70 |
| Storage Temperature | | ℃ | -40 to +85 |

*Above specifications are for device without connector.
*For devices with connectors, IL will be 0.3dB higher and RL will be 5dB lower.

**Package Dimensions**

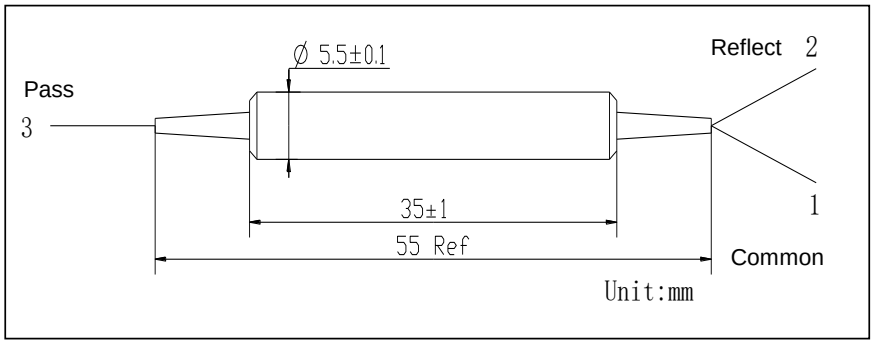


**Ordering Information**

**FWDM**-①①①①-②②-③③③-④④④-⑤-⑥⑥-⑦⑦

①①①①: Wavelength
2057 - 2000nm Pass / 1570nm Reflect
SSSS - Specify

②②: Handling Power
0.5 - 500mW

③③③: Connector Type on Port 1, 2 & 3
1A - FC/UPC
2A - FC/APC (Step)
N - None
S - Specify

④④④: Fiber Jacket on Port 1, 2 & 3
B - 250um Bare Fiber
F - 900um Loose Tube(White)
S - Specify

⑤: Fiber Length
0.8 - 0.8m
S - Specify

⑥⑥: Fiber Type
01 - SMF-28e Fiber (all ports)
11 - SMF-28e Fiber at Common & Reflect ports and SM 1950 Fiber at Pass port
S - Specify

⑦⑦:Package
01 - Ø5.5*35mm

# High Power Polarization Maintaining FWDM 1570/2000nm 10W

Spec No.: CAT-05-060C Date:

**Specifications**

| Parameters | | Unit | Values |
|---|---|---|---|
| Pass Band | Wavelength Range | nm | 1950~2050 |
| | Max. Insertion Loss | dB | 1.0 |
| | Typ. Insertion Loss | dB | 0.8 |
| | Min. Isolation | dB | 25 |
| | Typ. Isolation | dB | 30 |
| Reflection Band | Wavelength Range | nm | 1550~1590 |
| | Max. Insertion Loss | dB | 0.8 |
| | Typ. Insertion Loss | dB | 0.6 |
| | Min. Isolation | dB | 12 |
| | Typ. Isolation | dB | 15 |
| Min. Return Loss | | dB | 50 |
| Min. Directivity(over 1550~1590nm) | | dB | 55 |
| Min. Extinction Ratio | | dB | 18 |
| Typ. Extinction Ratio | | dB | 20 |
| Thermal Stability | | dB/℃ | ≤0.005 |
| Max. Optical Power (CW) | | W | 1, 3, 5 or Specify |
| Max. Tensile Load | | N | 5 |
| Fiber Type | | | PM 1550 Fiber, PM 1950 Fiber or Specify |
| Operating Temperature | | ℃ | -5 to +70 |
| Storage Temperature | | ℃ | -40 to +85 |

*Above specifications are for device without connector.
*For devices with connectors, IL will be 0.3dB higher, RL will be 5dB lower, ER will be 2dB lower, optical power is only 1W.
*The PM fiber and the connector key are aligned to the slow axis.
*The material must be RoHS compliant.

**Package Dimensions**

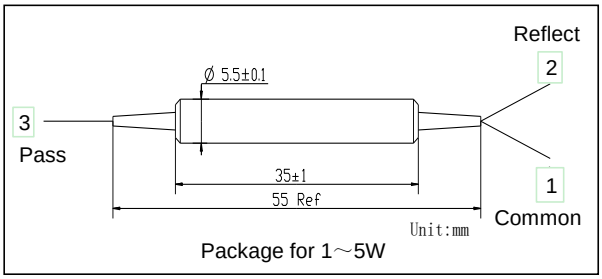

Package for 1～5W

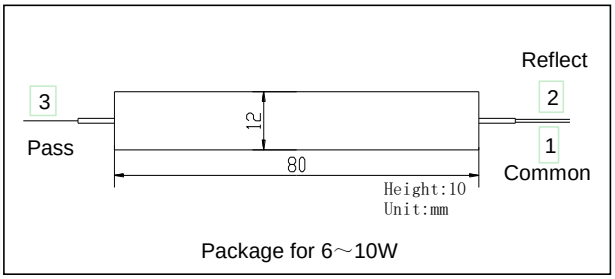

Package for 6～10W

**Ordering Information**

**HPMFWDM**-①①①①-②②-③③-④④④-⑤⑤-⑥⑥-⑦

①①①①: Wavelength
2057 - 2000nm Pass / 1570nm Reflect
SSSS - Specify

②②: Handling Power
01 - 1W
SS - Specify

③③③: Connector Type on Port 1, 2 & 3
1A - FC/UPC
2A - FC/APC
3D - SC/UPC
4D - SC/APC
N - None
S - Specify

④④④: Fiber Jacket on Port 1, 2 & 3
B - 250um Bare Fiber
C - 900um Loose Tube(Red)
F - 900um Loose Tube(White)
S - Specify

⑤⑤: Fiber Length
0.8 - 0.8m
S - Specify

⑥⑥: Fiber Type
09A - PM 1550 Fiber
20 - Nufern PM1950
31 - PM1950 Fiber at Common & Reflect ports and PM1550 Fiber at Pass port

⑦: Package Size
01 - Ø5.5x35
08 - 80*12*10

# High Power FWDM 1570/2000nm 10W

Spec No.: CAT-05-056C Date:

**Specifications**

| Parameters | | Unit | Values |
|---|---|---|---|
| Pass Band | Wavelength Range | nm | 1950~2050 |
| | Max. Insertion Loss | dB | 0.9 |
| | Typ. Insertion Loss | dB | 0.7 |
| | Min. Isolation | dB | 25 |
| | Typ. Isolation | dB | 30 |
| Reflection Band | Wavelength Range | nm | 1550~1590 |
| | Max. Insertion Loss | dB | 0.7 |
| | Typ. Insertion Loss | dB | 0.5 |
| | Min. Isolation | dB | 12 |
| | Typ. Isolation | dB | 15 |
| Min. Return Loss | | dB | 50 |
| Min. Directivity(over 1550~1590nm) | | dB | 55 |
| Max. PDL | | dB | 0.1 |
| Typ. PDL | | dB | 0.05 |
| Thermal Stability | | dB/℃ | ≤0.005 |
| Max. Optical Power (CW) | | W | 1, 3, 5 or Specify |
| Max. Tensile Load | | N | 5 |
| Fiber Type | | | SMF-28e Fiber, SM 1950 Fiber or Specify |
| Operating Temperature | | ℃ | -5 to +70 |
| Storage Temperature | | ℃ | -40 to +85 |

*Above specifications are for device without connector.

*For devices with connectors, IL will be 0.3dB higher, RL will be 5dB lower, optical power is only 1W.

*The material must be RoHS compliant.

**Package Dimensions**

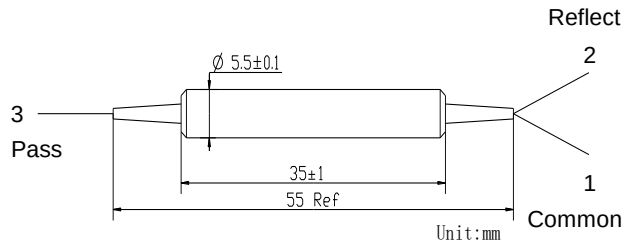


Package for 1～5W

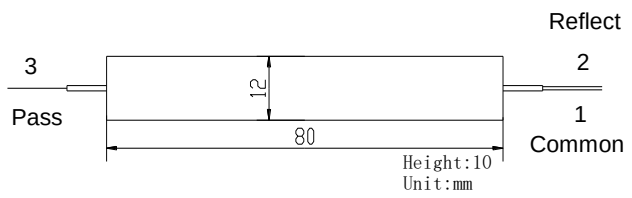


Package for 6～10W

**Ordering Information**

**HPFWDM**-①①①①-②②-③③③-④④④-⑤-⑥⑥-⑦⑦

①①①①: Wavelength
2055 - 2000nm Pass / 1550nm Reflect
SSSS - Specify

②②: Handling Power
01 - 1W
SS - Specify

③③③: Connector Type on Port 1, 2 & 3
1B - FC/UPC
2B - FC/APC(Step)
N - None
S - Specify

④④④: Fiber Jacket on Port 1, 2 & 3
B - 250um Fiber
F - 900um Loose Tube(White)
S - Specify

⑤: Fiber Length
1 - 1.0m
S - Specify

⑥⑥: Fiber Type
12 - SM1950 Fiber
24 - SM1950 at Common/Reflect ports and SM 1950 Fiber at Pass port

⑦⑦：Package Dimensions
01 - Ø5.5x35
08 - 80*12*10

# WDM 980/1550nm 300mW~10W

Spec No.: CAT-03-008F Date:

**Specifications**

| Parameters | Unit | Values | |
|---|---|---|---|
| Center Wavelength | nm | 980&1550 | |
| Operating Wavelength Range | nm | ±15 | |
| Min. Isolation | dB | 20 | |
| Max. Insertion Loss | dB | 0.25 | |
| Max. PDL | dB | 0.1 | |
| Min. Return Loss | dB | 50 | |
| Min. Directivity | dB | 50 | |
| Max. Optical Power (CW) | mW | 500 | |
| Max. Tensile Load | N | 5 | |
| Thermal Stability | dB/℃ | ≤ 0.002 over -5℃ to +70℃ | |
| Operating Temperature | ℃ | -5 to +70 | |
| Storage Temperature | ℃ | -40 to +85 | |
| Fiber Type | - | HI1060 Flex Fiber or HI1060 Fiber | |
| Package Dimensions | mm | 250um Bare Fiber | Ø3.0X40 |
| | | 900um Loose Tube | Ø3.0X56 |
| | | 3mm Loose Cable | 90X16X9 |

*Above specifications are for device without connector.

*For devices with connectors, IL will be 0.3dB higher and RL will be 5dB lower.

* The material must be RoHS compliant.

***Package Dimensions***


Optical Path: Port 3 to Port 1/2, Port 1 is 1550nm Port;
Mark: Port 1(Red) Port 2/3(Clear) for 250um Bare Fiber, 10cm to component extend 10cm length color mark;
Port 1(Red) Port 2(Blue)Port 3(Black) for 900um Loose Tube;
Port 1(Red) Other is cable color for 3mm Yellow cable, 10cm to component extend 10cm length color mark.

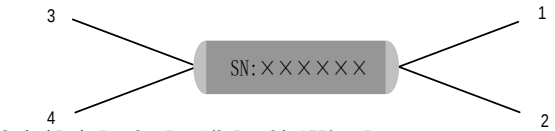


Optical Path: Port 3 to Port 1/2, Port 2 is 1550nm Port;
Port 4 to Port 1/2, Port 1 is 1550nm Port.
Mark: Port 1(Red)Port 4(Black) Port 2/3(Clear) for 250um Bare Fiber, 10cm to component extend 10cm length color mark;
Port 1(Red) Port 2(Blue) Port 3(White) Port 4(Black) for 900um Loose Tube;
Port 1(Red)Port 4(Black) Other is cable color for 3mm Yellow cable, 10cm to component extend 10cm length color mark.

**Ordering Information**

**WDM**-①①①①-②-③③③③-④④④④-⑤-⑥⑥-⑦⑦

①①①①: Wavelength
9855 - 980 & 1550nm

②: Port
1 - 1X2
2 - 2X2

③③③③: Connector Type
1B - FC/UPC
2B - FC/APC
3B - SC/UPC
4B - SC/APC
N - None
S - Specify

④④④④: Fiber Jacket
B -250um Bare Fiber
C - 900um Loose Tube(Red)
D - 900um Loose Tube(Blue)
E - 900um Loose Tube(Black)
F - 900um Loose Tube(White)
T - 3mm松套管(黄色)

⑤: Fiber Length
1 - 1m
S - Specify

⑥⑥:Fiber Type
20 - HI1060 Flex Fiber
1E - HI1060 Fiber

⑦⑦:Package Dimensions
14 - Ø3.0x40
16 - Ø3.0x56
29 - 90x16x9

# WDM 976/1064nm 300mW~10W

Spec No.: CAT-03-010D Date:

**Specifications**

| Parameters | Unit | Values | |
|---|---|---|---|
| Center Wavelength | nm | 980&1060 | |
| Operating Wavelength Range | nm | ±5 | |
| Min. Isolation | dB | 15 | |
| Max. Insertion Loss | dB | 0.35 | |
| Max. PDL | dB | 0.15 | |
| Min. Return Loss | dB | 50 | |
| Min. Directivity | dB | 50 | |
| Max. Optical Power (CW) | mW | 500 | |
| Max. Tensile Load | N | 5 | |
| Thermal Stability | dB/℃ | ≤ 0.002 over -5 °C to +70 °C | |
| Operating Temperature | °C | -5 to +70 | |
| Storage Temperature | °C | -40 to +85 | |
| Fiber Type | - | HI1060 Flex Fiber or HI1060 Fiber | |
| Package Dimensions | mm | 250um Bare Fiber | Ø3.0X54 |
| | | 900um Loose Tube | Ø3.0X75 |
| | | 3mm Loose Cable | 90X16X9 |

*Above specifications are for device without connector.

*For devices with connectors, IL will be 0.3dB higher and RL will be 5dB lower.

* The material must be RoHS compliant.

**Package Dimensions**


Optical Path: Port 3 to Port 1/2, Port 1 is 1060nm Port.
Mark: Port 1(Red) Port 2/3(Clear) for 250um Bare Fiber, 10cm to component extend 10cm length color mark;
Port 1(Red) Port 2(Blue)Port 3(Black) for 900um Loose Tube;
Port 1(Red) Other is cable color for 3mm Yellow cable, 10cm to component extend 10cm length color mark.


Optical Path: Port 3 to Port 1/2, Port 2 is 1060nm Port;
Port 4 to Port 1/2, Port 1 is 1060nm Port.
Mark: Port 1(Red)Port 4(Black) Port 2/3(Clear) for 250um Bare Fiber, 10cm to component extend 10cm length color mark;
Port 1(Red) Port 2(Blue) Port 3(White) Port 4(Black) for 900um Loose Tube;
Port 1(Red)Port 4(Black) Other is cable color for 3mm Yellow cable, 10cm to component extend 10cm length color mark.

**Ordering Information**

**WDM**-①①①①-②-③③③③-④④④④-⑤-⑥⑥-⑦⑦

①①①①: Wavelength
9806 - 980 & 1060nm

②: Port Configuration
1 - 1X2
2 - 2X2

③③③③: Connector Type
1B - FC/UPC
2B - FC/APC
3B - SC/UPC
4B - SC/APC
N - None
S - Specify

④④④④: Fiber Jacket
B -250um Bare Fiber
C - 900um Loose Tube(Red)
D - 900um Loose Tube(Blue)
E - 900um Loose Tube(Black)
F - 900um Loose Tube(White)
T - 3mm松套管(黄色)

⑤: Fiber Length
1 - 1m
S - Specify

⑥⑥:Fiber Type
20 - HI1060 Flex Fiber
1E - HI1060 Fiber

⑦⑦:Package Dimensions
13 - Ø3.0x54
77 - Ø3.0x75
29 - 90x16x9

# WDM 1310/1550nm 300mW~10W

Spec No.: CAT-03-007E Date:

Specifications

| Parameters | Unit | Values | |
|---|---|---|---|
| Center Wavelength | | 1310&1550 | 1310&1550 |
| Bandwidth | nm | ±10 | ±15 |
| Min. Isolation | dB | 20 | 17 |
| Max. Insertion Loss | dB | 0.3 | 0.3 |
| Max. PDL | dB | 0.15 | 0.15 |
| Min. Directivity | dB | 55 | 55 |
| Max. Optical Power (CW) | mW | 500 | |
| Max. Tensile Load | N | 5 | |
| Thermal Stability | dB/℃ | ≤ 0.002 over -5℃ to +70℃ | |
| Operating Temperature | ℃ | -5 to +70 | |
| Storage Temperature | ℃ | -40 to +85 | |
| Fiber Type | - | SMF-28e Fiber | |
| Package Dimensions | mm | 250um Bare Fiber | Ø3.0X40 |
| | | 900um Loose Tube | Ø3.0X56 |
| | | 3mm Loose Cable | 90X16X9 |

*Above specifications are for device without connector.

*For devices with connectors, IL will be 0.3dB higher.

* The material must be RoHS compliant.

Package Dimensions


Optical Path: Port 3 to Port 1/2, Port 1 is 1550nm Port.
Mark: Port 1(Red) Port 2/3(Clear) for 250um Bare Fiber, 10cm to component extend 10cm length color mark
Port 1(Red) Port 2(Blue)Port 3(Black) for 900um Loose Tube;
Port 1(Red) Other is cable color for 3mm Yellow cable, 10cm to component extend 10cm length color mark.


Optical Path: Port 3 to Port 1/2, Port 2 is 1550nm Port;
Port 4 to Port 1/2, Port 1 is 1550nm Port.
Mark: Port 1(Red)Port 4(Black) Port 2/3(Clear) for 250um Bare Fiber, 10cm to component extend 10cm length color mark
Port 1(Red) Port 2(Blue) Port 3(White) Port 4(Black) for 900um Loose Tube;
Port 1(Red)Port 4(Black) Other is cable color for 3mm Yellow cable, 10cm to component extend 10cm length color mark.

Ordering Information

WDM-①①①①-②-③③③③-④④④④-⑤-⑥⑥-⑦⑦

①①①①: Wavelength
3155 - 1310 & 1550nm

②: Port
1 - 1X2
2 - 2X2

③③③③: Connector Type
1B - FC/UPC
2B - FC/APC
3B - SC/UPC
4B - SC/APC
N - None
S - Specify

④④④④: Fiber Jacket
B -250um Bare Fiber
C - 900um Loose Tube(Red)
D - 900um Loose Tube(Blue)
E - 900um Loose Tube(Black)
F - 900um Loose Tube(White)
T - 3mm松套管(黄色)

⑤: Fiber Length
1 - 1m
S - Specify

⑥⑥:Fiber Type
09 - SMF-28e Fiber

⑦⑦:Package Dimensions
14 - Ø3.0x40
16 - Ø3.0x56
29 - 90x16x9

# WDM 1480/1550nm 300mW~10W

Spec No.: CAT-03-013C Date:

**Specifications**

| Parameters | Unit | Values | | |
|---|---|---|---|---|
| Center Wavelength | nm | 1490/1550 | 1480/1550 | 1480/1590 |
| Operating Wavelength Range | nm | ±5 | ±5 | ±5 |
| Min. Isolation | dB | 11 | 13 | 15 |
| Max. Insertion Loss | dB | 0.55 | 0.4 | 0.4 |
| Max. PDL | dB | 0.15 | 0.15 | 0.15 |
| Min.Return Loss | dB | 50 | 50 | 50 |
| Min.Directivity | dB | 50 | 50 | 50 |
| Max. Optical Power (CW) | mW | 500 | | |
| Max. Tensile Load | N | 5 | | |
| Thermal Stability | dB/℃ | ≤ 0.002 over -5 °C to +70 °C | | |
| Operating Temperature | °C | -5 to +70 | | |
| Storage Temperature | °C | -40 to +85 | | |
| Fiber Type | | SMF-28e Fiber | | |
| Package Dimensions | mm | 250um Bare Fiber | Ø3.0X55 | |
| | | 900um Loose Tube | Ø3.0X75 | |
| | | 3mm Loose Cable | 90X16X9 | |

*Above specifications are for device without connector.

*For devices with connectors, IL will be 0.3dB higher and RL will be 5dB lower.

* The material must be RoHS compliant.

**Package Dimensions**


Optical Path: Port 3 to Port 1/2, Port 1 is 15xxnm Port.
Mark: Port 1(Red) Port 2/3(Clear) for 250um Bare Fiber, 10cm to component extend 10cm length color mark;
Port 1(Red) Port 2(Blue)Port 3(Black) for 900um Loose Tube;
Port 1(Red) Other is cable color for 3mm Yellow cable, 10cm to component extend 10cm length color mark.

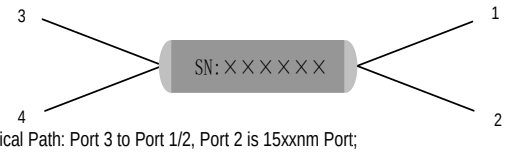


Optical Path: Port 3 to Port 1/2, Port 2 is 15xxnm Port;
Port 4 to Port 1/2, Port 1 is 15xxnm Port.
Mark: Port 1(Red)Port 4(Black) Port 2/3(Clear) for 250um Bare Fiber, 10cm to component extend 10cm length color mark;
Port 1(Red) Port 2(Blue) Port 3(White) Port 4(Black) for 900um Loose Tube;
Port 1(Red)Port 4(Black) Other is cable color for 3mm Yellow cable, 10cm to component extend 10cm length color mark.

**Ordering Information**

**WDM**-①①①①-②-③③③③-④④④④-⑤-⑥⑥-⑦⑦

①①①①: Wavelength
4955 - 1490/1550
4855 - 1480/1550
4859 - 1480/1590

②: Port
1 - 1X2
2 - 2X2

③③③③: Connector Type
1B - FC/UPC
2B - FC/APC
3B - SC/UPC
4B - SC/APC
N - None
S - Specify

④④④④: Fiber Jacket
B -250um Bare Fiber
C - 900um Loose Tube(Red)
D - 900um Loose Tube(Blue)
E - 900um Loose Tube(Black)
F - 900um Loose Tube(White)
T - 3mm松套管(黄色)

⑤: Fiber Length
1 - 1m
S - Specify

⑥⑥:Fiber Type
09 - SMF-28e Fiber

⑦⑦:Package Dimensions
13 - Ø3.0x55
77 - Ø3.0x75
29 - 90x16x9

# Polarization Maintaining Band Pass Filter 980nm 300mW

Spec Review No.: SR0712014D Date: Oct. 9, 2023

## Specifications

| Parameters | Unit | Values |
|---|---|---|
| Nominal Center Wavelength | nm | 980 |
| Max. Insertion Loss over 960~990nm | dB | 0.8 |
| Stop Band | nm | 1020~1100 |
| Min. Stop Band Isolation | dB | 30 |
| Min. Extinction Ratio (only for F-Type)@23 ℃ | dB | 22 |
| Min. Extinction Ratio (only for B-Type)@23 ℃ | dB | 20 |
| Min. Optical Return Loss | dB | 50 |
| Max. Optical Power(CW,SOP) | mW | 500 |
| Max. Tensile Load | N | 5 |
| Fiber Type | -- | PM 980 Panda Fiber |
| Operating Temperature | ℃ | -5 to +70 |
| Storage Temperature | ℃ | -40 to +85 |

*Above specification are for devices without connector.

*For devices with connectors, IL will be 0.5dB higher, RL will be 5dB lower, ER will be 2dB lower.

*The PM fiber and the connector key are aligned to the slow axis.

*The material must be RoHS compliant.

## Package Dimensions

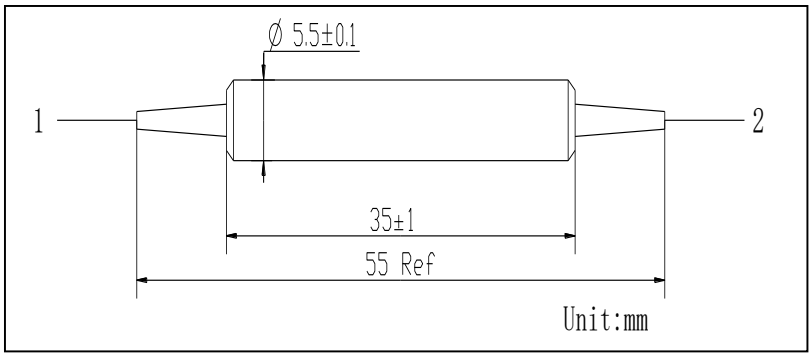


## Ordering Information

**PMBPF**-①①①①-②②-③③-④④-⑤-⑥⑥-⑦⑦-⑧-⑨⑨-⑩⑩

①①①①: Center Wavelength
9806- 960~990nm/1020～1100nm
SSSS - Specify

②②: Pass Band Width
30 - 30nm
SS - Specify

③③: Stop Band Width
80 - 80nm
SS - Specify

④④: Handing Power
0.5 - 500mW
SS - Specify

⑤: Axis Alignment
F - Fast Axis Blocked
B - Both Axis Working

⑥⑥: Connector Type on Port 1, 2
1B - FC/UPC
2B - FC/APC (Step)
3D - SC/UPC
4D - SC/APC (Step)
SS - Specify
N - None

⑦⑦: Fiber Jacket on Port 1, 2
B - 250um Bare Fiber
C - 900um Loose Tube(Red)
D - 900um Loose Tube(Blue )
E - 900um Loose Tube(Black )
SS - Specify

⑧: Fiber Length
0.8 - 0.8 m
S - Specify

⑨⑨:Fiber Type
02B -PM980 Fiber

⑩⑩ Package Type
01 - Ø5.5x35

# High Power Polarization Maintaining Band Pass Filter 980nm 300mW

Spec Review No.: SR2305042A Date: May.12, 2023

**Specifications**

| Parameters | Unit | Values |
|---|---|---|
| Operating Wavelength Range | nm | 800~1300 |
| Nominal Center Wavelength(CWL) | nm | 980 |
| Min. Pass Band Width @0.5dB | nm | 4.0 |
| Max. Stop Band width @25dB | dB | 12 |
| Typ. Insertion Loss @980±2nm | dB | 1.0 |
| Max. Insertion Loss @980±2nm | dB | 1.3 |
| Min. Extinction Ratio (only for B-Type) | dB | 20 |
| Min. Extinction Ratio (only for F-Type) | dB | 22 |
| Min. Optical Return Loss | dB | 50 |
| Max. Optical Power(CW) | W | 1 |
| Max. Tensile Load | N | 5 |
| Fiber Type | - | PM 980 Panada Fiber |
| Operating Temperature | ℃ | -5 to +70 |
| Storage Temperature | ℃ | -40 to +85 |

*Above specifications are for device without connector.

*For devices with connectors, IL will be 0.5dB higher, RL will be 5dB lower, ER will be 2dB lower and optical power is only 1000mW.

*The PM fiber and the connector key are aligned to the slow axis.

*The material must be RoHS compliant.

**Package Dimensions**

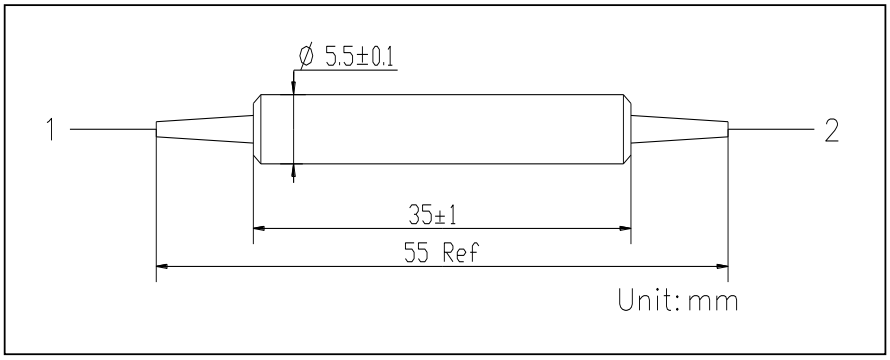


**Ordering Information**

**HPMBPF**-①①①-②②-③③-④-⑤-⑥⑥-⑦⑦-⑧-⑨⑨-⑩⑩

①①: Center Wavelength
980 - 980nm
SS - Specify

②②: Pass Band Width
04 - 4nm
SS - Specify

③③: Stop Band Width
12 - 12nm
SS - Specify

④:Handling Power
01 - 1W
S - Specify

⑤: Axis Alignment
F - Fast Axis Blocked
B - Both Axis Working

⑥⑥: Connector Type on Port 1, 2
1A - FC/UPC
2A - FC/APC
3D - SC/UPC
4D - SC/APC
S - Specify
N - None

⑦⑦: Fiber Jacket on Port 1, 2
B - Bare Fiber
C - 900um Loose Tube(Red)
D - 900um Loose Tube(Blue )
E - 900um Loose Tube(Black )
S - Specify

⑧: Fiber Length
0.8 - 0.8 m
S - Specify

⑨⑨:Fiber Type
02A -PM980 Fiber

⑩⑩ Package Type
01 - Ø5.5x35

# Band Pass Filter 980nm 300mW

Spec Review No.: SR2303059B Date:Apr.23, 2023

## Specifications

| Parameters | Unit | Values |
|---|---|---|
| Nominal Center Wavelength | nm | 980 |
| Max. Insertion Loss over 960~990nm | dB | 0.8 |
| Stop Band | nm | 1020～1100 |
| Min. Stop Band Isolation | dB | 30 |
| Max. PDL | dB | 0.1 |
| Min. Optical Return Loss | dB | 50 |
| Max. Optical Power(CW) | mW | 500 |
| Max. Tensile Load | N | 5 |
| Fiber Type | -- | Corning HI 1060 Fiber |
| Operating Temperature | ℃ | -5 to +70 |
| Storage Temperature | ℃ | -40 to +85 |

*Above specifications are for device without connector.

*For devices with connectors, IL will be 0.5dB higher, RL will be 5dB lower.

*The material must be RoHS compliant.

## Package Dimensions

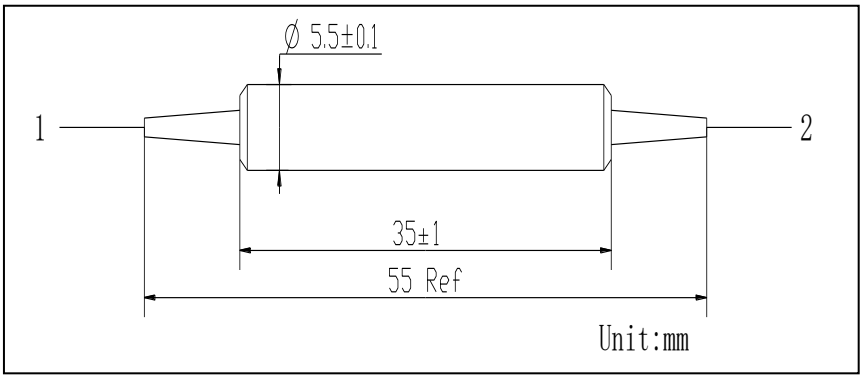


## Ordering Information

**BPF**-①①①①-②②-③③-④④-⑤⑤-⑥⑥-⑦-⑧⑧-⑨⑨

①①①①: Center Wavelength
9806- 960~990nm/1020～1100nm

②②: Pass Band Width
30 - 30nm
SS - Specify

③③: Stop Band Width
80 - 80nm
SS - Specify

④④: Handing Power
0.5 - 500mW
S - Specify

⑤⑤: Connector Type on Port1,2
1B - FC/UPC
2B - FC/APC
3B - SC/UPC
4B - SC/APC
N - None

⑥⑥: Fiber Jacket on Port 1,2
B - 250um Bare Fiber
F - 900um Loose Tube(White)
G - 900um Loose Tube(Yellow)
E - 900um Loose Tube(Black)
S - Specify

⑦: Fiber Length
0.8 - 0.8 m
S - Specify

⑧⑧:Fiber Type
01 - HI-1060 Fiber

⑨⑨: Package Type
01 - Ø5.5x35

# Multi-Mode Band Pass Filter 980nm 10W

Spec Review No.:SR2306105A Date: Jun. 27, 2023

**Specifications**

| Parameters | Unit | Values |
|---|---|---|
| Pass Band Wavelength Range | nm | 960~990 |
| Max. Insertion Loss over 960~990nm | dB | 0.6 |
| Stop Band Wavelength Range | nm | 1020-1120 |
| Min. Stop Band Isolation | dB | 30 |
| Min. Optical Return Loss | dB | 30 |
| Max. Optical Power (CW,Only for 960~990nm) | W | 30 |
| Max. Tensile Load | N | 5 |
| Fiber Type | -- | MMF105/125,NA.0.22 |
| Operating Temperature | ℃ | -5 to +70 |
| Storage Temperature | ℃ | -40 to +85 |

*Above specifications are for device without connector.

*For devices with connectors, IL will be 0.2dB higher, RL will be 20dB lower，optical power is only 2W.

*The material must be RoHS compliant.

**Package Dimensions**

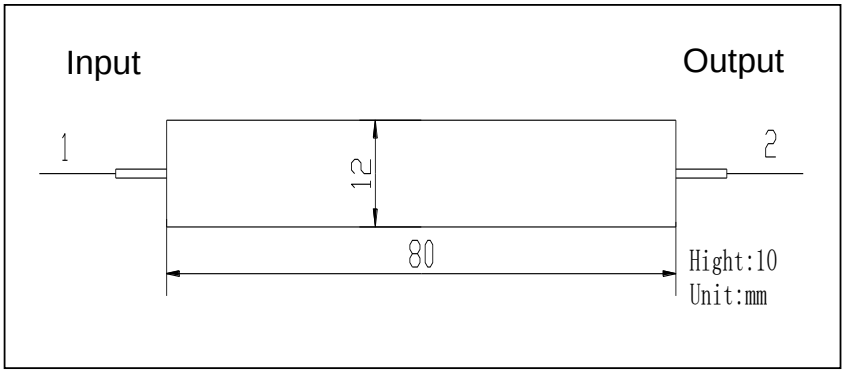


**Ordering Information**

**MMBPF**-①①①①-②②-③③-④-⑤⑤-⑥⑥-⑦-⑧⑧-⑨⑨

①①①①: Wavelength

9706- 960~990nm/1020～1120nm

SSSS - Specify

②②: Pass Band Width

30 - 30nm(960~990nm)

SS - Specify

③③: Stop Band Width

100 - 100nm(1020~1120nm)

SS - Specify

④:Handling Power

30 - 30W

S - Specify

⑤⑤: Connector Type on Port 1, 2

1B - FC/UPC

2B - FC/APC (Step)

3D - SC/UPC

4D - SC/APC (Step)

N - None

S - Specify

⑥⑥: Fiber Jacket on Port 1, 2

B - 250um Fiber

E - 900um Loose Tube(Black)

H - 900um Loose Tube(Green)

S - Specify

⑦: Fiber Length

0.8 - 0.8m

S - Specify

⑧⑧:Fiber Type

04 - MM Fiber 105/125.NA0.22

S - Specify

⑨⑨ Package Type

08 - 80*12*10

Form NO. D05-203-05 Rev.B

# Polarization Maintaining Band Pass Filter 1030nm 300mW

Spec Review No.: SR2301721A Date: Apr.23, 2023

## Specifications

| Parameters | Unit | Values |
|---|---|---|
| Nominal Center Wavelength | nm | 1030 |
| Max. Insertion Loss over CWL+/-1.0nm | dB | 1.2 |
| Min. Pass Band Width @0.5dB | nm | 2.0 |
| Max. Stop Band Width @25dB | nm | 8.0 |
| Min. Extinction Ratio (only for F-Type)@23℃ | dB | 22 |
| Min. Extinction Ratio (only for B-Type)@23℃ | dB | 20 |
| Min. Optical Return Loss | dB | 50 |
| Max. Optical Power(CW) | mW | 300 |
| Max. Tensile Load | N | 5 |
| Fiber Type | -- | PM 980 Panda Fiber |
| Operating Temperature | ℃ | -5 to +70 |
| Storage Temperature | ℃ | -40 to +85 |

*Above specifications are for device without connector.

*For devices with connectors, IL will be 0.5dB higher, ER will be 2dB lower and RL will be 5dB lower.

*The PM fiber and the connector key are aligned to the slow axis.

*The material must be RoHS compliant.

## Package Dimensions

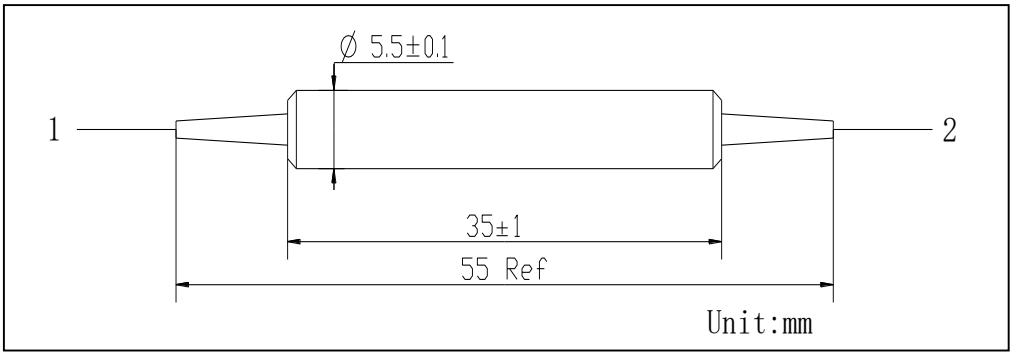


## Ordering Information

**PMBPF-①①①①-②②-③③-④-⑤-⑥⑥-⑦⑦-⑧-⑨⑨-⑩⑩**

①①①①: Center Wavelength
1030 - 1030 nm
SSSS - Specify

②②: Pass Band Width
02 - 2.0 nm
SS - Specify

③③: Stop Band Width
08 - 8 nm
SS - Specify

④:Handling Power
0.3 - 300mW
S - Specify

⑤: Axis Alignment
F - Fast Axis Blocked
B - Both Axis Working

⑥⑥: Connector Type on Port 1, 2
1B - FC/UPC
2B - FC/APC
3B - SC/UPC
4B - SC/APC
S - Specify
N - None

⑦⑦: Fiber Jacket on Port 1, 2
B - Bare Fiber
C - 900um Loose Tube(Red)
D - 900um Loose Tube(Blue )
E - 900um Loose Tube(Black )
S - Specify

⑧: Fiber Length
0.8 - 0.8 m
S - Specify

⑨⑨:Fiber Type
02B - PM980 Fiber

⑩⑩ Package Type
01 - Ø5.5x35

# Band Pass Filter 1030nm 300mW

Spec Review No.: SR1409012B Date: Apr.21, 2023

**Specifications**

| Parameters | Unit | Values |
|---|---|---|
| Nominal Center Wavelength | nm | 1030 |
| Max. Insertion Loss | dB | 1.0 |
| Min. Pass Bandwidth @0.5dB | nm | 4 |
| Max. Stop Bandwidth @20dB | nm | 6 |
| Max. PDL | dB | 0.1 |
| Min. Optical Return Loss | dB | 50 |
| Max. Optical Power(CW) | mW | 300 |
| Max. Tensile Load | N | 5 |
| Fiber Type | -- | Corning HI 1060 Fiber |
| Operating Temperature | ℃ | -5 to +70 |
| Storage Temperature | ℃ | -40 to +85 |

*Above specifications are for device without connector.

*For devices with connectors, IL will be 0.5dB higher, RL will be 5dB lower.

*The material must be RoHS compliant.

**Package Dimensions**

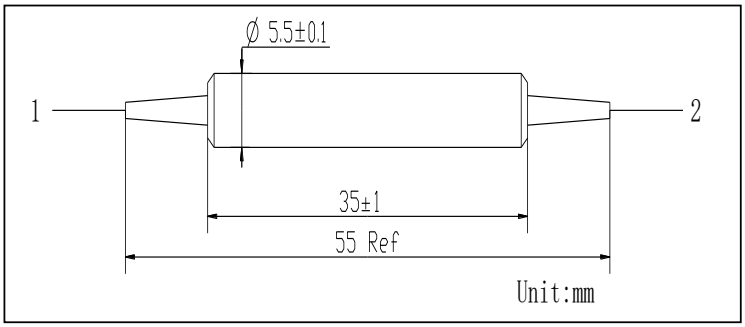


## Ordering Information

**BPF**-①①①①-②②-③③-④④-⑤⑤-⑥⑥-⑦-⑧⑧-⑨⑨

①①①①: Center Wavelength
1030 - 1030nm
SSSS - Specify

②②: Pass Band Width
04 - 4nm
SS - Specify

③③: Stop Band Width
06 - 6nm
SS - Specify

④④: Handing Power
0.3 - 300mW
S - Specify

⑤⑤: Connector Type on Port1,2
1B - FC/UPC
2B - FC/APC
3B - SC/UPC
4B - SC/APC
N - None

⑥⑥: Fiber Jacket on Port 1,2
B - 250um Bare Fiber
F - 900um Loose Tube(White)
S - Specify

⑦: Fiber Length
0.8 - 0.8 m
S - Specify

⑧⑧:Fiber Type
01 - HI-1060 Fiber

⑨⑨: Package Type
01 - Ø5.5x35

# High Power Polarization Maintaining Band Pass Filter 1030nm 10W

Spec Review No.: SR2401054A Date: Jan. 25, 2024

**Specifications**

| Parameters | Unit | Values |
|---|---|---|
| Nominal Center Wavelength (λc) | nm | 1030 |
| Max. Insertion Loss over λc (1→2) | dB | 0.9 |
| Pass Band Width @0.5dB | nm | 4 |
| Max. Stop Band Width @25dB | nm | 8 |
| Min. ER (only for Fast Axis Blocked Type) | dB | 20 |
| Min. ER (only for Both Axis Working Type) | dB | 18 |
| Min. Optical Return Loss (only for Port 1、Port 2) | dB | 50 |
| Max. Optical Power (CW,Proper SOP for F type) | W | 5 |
| Max. Tensile Load | N | 5 |
| Fiber Type | -- | PLMA-GDF-14/125-UF NA0.07 for Port 1、2<br>MM 105/125 Fiber for Port 3 |
| Operating Temperature | ℃ | -5 to +70 |
| Storage Temperature | ℃ | -40 to +85 |

*Above specifications are for device without connector.
*For devices with connectors, IL will be 0.5dB higher, ER will be 2dB lower, RL will be 5dB lower, optical power is only 1W.
*The PM fiber and the connector key are aligned to the slow axis.
*Port 3 is for guiding the rejected light out, please be careful when handling.
*The material must be RoHS compliant.

**Package Dimensions**

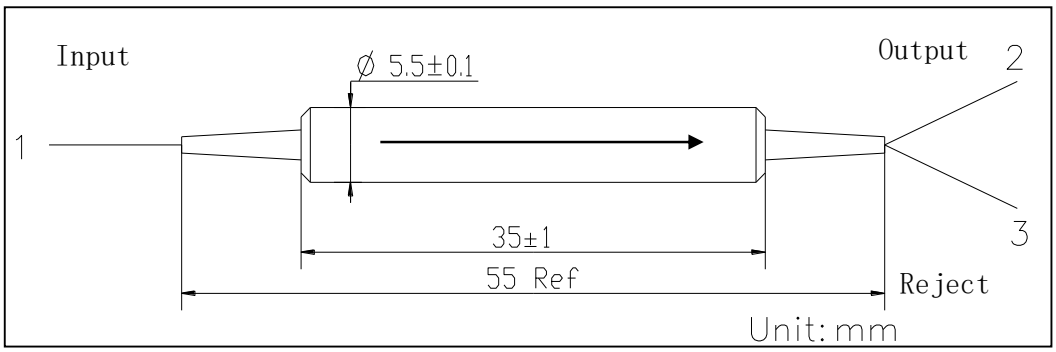


## Ordering Information

**HPMBPF-①①①①-②②-③③-④④-⑤-⑥⑥⑥-⑦⑦⑦-⑧-⑨⑨-⑩⑩**

①①①①: Center Wavelength
1030 - 1030nm

②②: Pass Band Width
04 - 4 nm
SS - Specify

③③: Stop Band Width
08 - 8 nm
SS - Specify

④④: Handling Power
05 - 5W

⑤: Axis Alignment
F - Fast Axis Blocked
B - Both Axis Working

⑥⑥⑥: Connector Type
1B - FC/UPC
2B - FC/APC (Step)
3D - SC/UPC
4D - SC/APC (Step)
N - None
SSS - Specify

⑦⑦⑦: Fiber Jacket
B - Bare Fiber
C - 900um Loose Tube(Red)
D - 900um Loose Tube(Blue )
E - 900um Loose Tube(Black )
SSS - Specify

⑧: Fiber Length
0.8 - 0.8 m
S - Specify

⑨⑨:Fiber Type
18 - PLMA-GDF-14/125-UF NA0.07 for Port 1、2
MM 105/125 Fiber for Port 3

⑩⑩ Package Type
01 - Ø5.5x35

Form No.:D05-203-05 Rev.B

# High Power Band Pass Filter 1064nm 10W

Spec Review No.: SR2307043A Date: Jul. 13, 2023

## Specifications

| Parameters | Unit | Values |
|---|---|---|
| Nominal Center Wavelength | nm | 1064 |
| Min. Pass Bandwidth @0.5dB | nm | 2 |
| Max. Stop Bandwidth @25dB | nm | 6 |
| Max. Insertion Loss (Port 1 to Port 3, @CWL±1nm) | dB | 1.2 |
| Nominal Insertion Loss (Port 1 to Port 2) | dB | 0.8 (As Small As Possible) |
| Max. PDL (Port 1 to Port 3, @CWL±1nm) | dB | 0.1 |
| Min. Optical Return Loss (only for Port 1 and Port 3) | dB | 50 |
| Max. Optical Power | -- | 100mW Average Power, 5KW Peak Power |
| Max. Tensile Load | N | 5 |
| Fiber Type | -- | Corning HI 1060 Fiber |
| Operating Temperature | ℃ | -5 to +70 |
| Storage Temperature | ℃ | -40 to +85 |

*Above specifications are for device without connector.

*For devices with connectors, IL will be 0.5dB higher, RL will be 5dB lower and handling power is only 1W.

*Port 2 is for rejected light dumping or monitoring, please be careful when handling.

*The material must be RoHS compliant.

## Package Dimensions

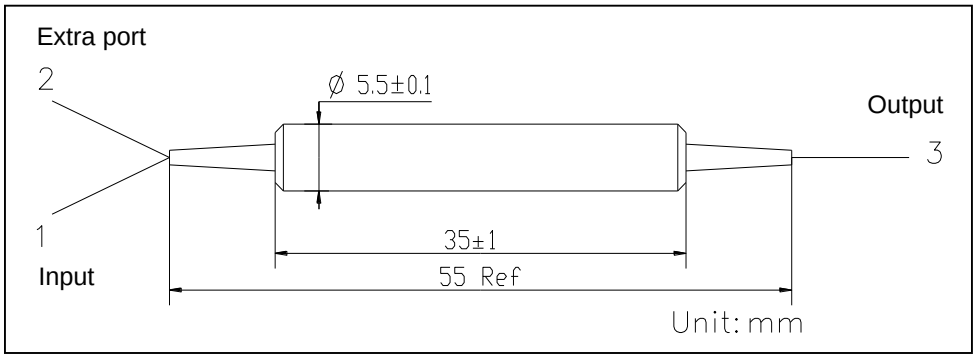


## Ordering Information

**HPBPF**-①①①①-②②-③③-④④-⑤⑤⑤-⑥⑥⑥-⑦-⑧⑧-⑨⑨

①①①①: Center Wavelength
1064 - 1064nm
SSSS - Specify

②②: Pass Band Width
02 - 2nm
SS - Specify

③③: Stop Band Width
06 - 6nm
SS - Specify

④④: Handing Power
0.1 - 100mW /5KW
SS - Specify

⑤⑤⑤: Connector Type on port 1, 2 & 3
1B - FC/UPC
2B - FC/APC (Step)
3D - SC/UPC
4D - SC/APC (Step)
N - None
SSS - Specify

⑥⑥⑥: Fiber Jacket for port 1, 2 & 3
B - 250um Bare Fiber
F - 900um Loose Tube(White)
G - 900um Loose Tube(Yellow)
E - 900um Loose Tube(Black)
SSS - Specify

⑦: Fiber Length
0.8 - 0.8 m
S - Specify

⑧⑧: Fiber Type
01 - HI 1060 Fiber
SS - Specify

⑨⑨: Package Type
01 - Ø5.5x35

# Polarization Maintaining Band Pass Filter 1310nm 1550nm 300mW

Spec Review No.: SR0902011C Date: Apr 19, 2023

## Specifications

| Parameters | Unit | Values |
|---|---|---|
| Nominal Center Wavelength | nm | 1550 |
| Max. Insertion Loss over 1550+/-1nm | dB | 0.8 |
| Min. Pass Band Width @0.5dB | nm | 2.0 |
| Max. Stop Band width@25dB | nm | 8.0 |
| Min. Extinction Ratio (only for F-Type)@23℃ | dB | 22 |
| Min. Extinction Ratio (only for B-Type)@23℃ | dB | 20 |
| Min. Optical Return Loss | dB | 50 |
| Max. Optical Power(CW) | mW | 500 |
| Max. Tensile Load | N | 5 |
| Fiber Type | - | PM 1550 panda fiber |
| Operating Temperature | ℃ | -5 to +70 |
| Storage Temperature | ℃ | -40 to +85 |

*Above specifications are for device without connector.

*For devices with connectors, IL will be 0.3dB higher, RL will be 5dB lower, ER will be 2dB lower.

## Package Dimensions

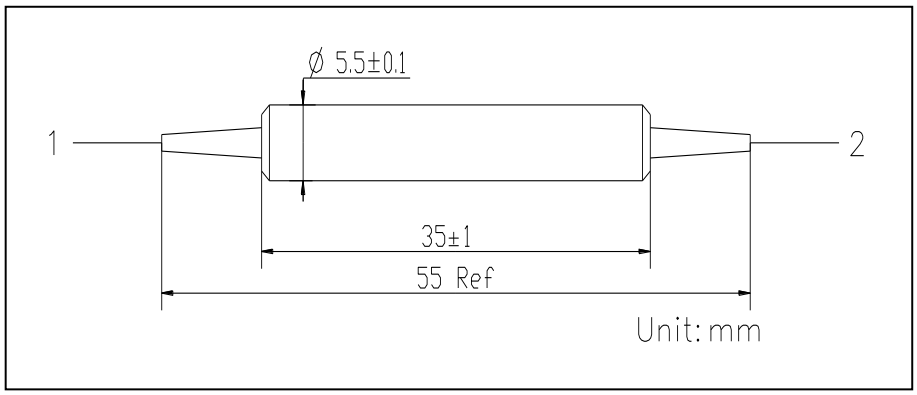


## Ordering Information

**PMBPF**-①①①①-②②-③③-④-⑤-⑥⑥-⑦⑦-⑧-⑨⑨-⑩⑩

①①①①: Center Wavelength
1550 - 1550nm
SSSS - Specify

②②: Pass Band Width
02 - 2nm
SS - Specify

③③: Stop Band Width
08 - 8nm
SS - Specify

④:Handling Power
0.5 - 500mW
S - Specify

⑤: Axis Alignment
F - Fast Axis Blocked
B - Both Axis Working

⑥⑥: Connector Type on Port 1, 2
1B - FC/UPC
2B - FC/APC
3B - SC/UPC
4B - SC/APC
S - Specify
N - None

⑦⑦: Fiber Jacket on Port 1, 2
B - Bare Fiber
C - 900um Loose Tube(Red)
S - Specify

⑧: Fiber Length
0.8 - 0.8 m
S - Specify

⑨⑨:Fiber Type
01A -PM1550 Fiber

⑩⑩ Package Type
01 - Ø5.5x35

# Band Pass Filter 1310nm 1550nm 300mW

Spec Review No.: SR0803010B Date:Apr.19, 2023

## Specifications

| Parameters | Unit | Values |
|---|---|---|
| Nominal Center Wavelength | nm | 1550 |
| Max. Insertion Loss over 1550+/-1nm | dB | 0.8 |
| Min. Pass Band Width @0.5dB | nm | 2 |
| Max. Stop Band Width @25dB | nm | 8 |
| Max. PDL | dB | 0.1 |
| Min. Optical Return Loss | dB | 50 |
| Max. Optical Power (CW) | mW | 500 |
| Max. Tensile Load | N | 5 |
| Fiber Type | - | Corning SMF-28e Fiber |
| Operating Temperature | ℃ | -5 to +70 |
| Storage Temperature | ℃ | -40 to +85 |

*Above specifications are for device without connector.

*For devices with connectors, IL will be 0.3dB higher, RL will be 5dB lower .

*The material must be RoHS compliant.

## Package Dimensions

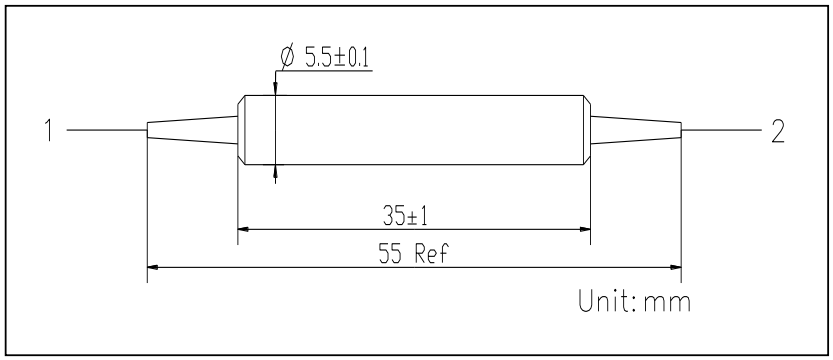


## Ordering Information

**BPF**-①①①①-②②-③③-④④-⑤⑤-⑥⑥-⑦-⑧⑧-⑨⑨

①①①①: Center Wavelength
1550 - 1550nm

②②: Pass Band Width
02 - 2nm
SS - Specify

③③: Stop Band Width
08 - 8nm
SS - Specify

④④: Handing Power
0.5 - 500mW
S - Specify

⑤⑤: Connector Type on Port1,2
1B - FC/UPC
2B - FC/APC
3B - SC/UPC
4B - SC/APC
N - None

⑥⑥: Fiber Jacket on Port 1,2
B - 250um Bare Fiber
F - 900um Loose Tube(White)
S - Specify

⑦: Fiber Length
0.8 - 0.8 m
S - Specify

⑧⑧:Fiber Type
02 - SMF-28e Fiber

⑨⑨: Package Type
01 - Ø5.5x35

# High Power Polarization Maintaining Band Pass Filter 1550nm 300mW

Spec Review No.: SR2305028A Date: May 09, 2023

## Specifications

| Parameters | Unit | Values |
|---|---|---|
| Nominal Center Wavelength | nm | 1550 |
| Max. Insertion Loss over 1550+/-1nm | dB | 0.8 |
| Min. Pass Band Width @0.5dB | nm | 2.0 |
| Max. Stop Band width@25dB | nm | 8.0 |
| Min. Extinction Ratio (only for F-Type)@23℃ | dB | 22 |
| Min. Extinction Ratio (only for B-Type)@23℃ | dB | 20 |
| Min. Optical Return Loss | dB | 50 |
| Max. Optical Power | -- | 50mW Average Power, 1ns@50KHz, Peak Power 1kW |
| Max. Tensile Load | N | 5 |
| Fiber Type | -- | PM 1550 panda fiber |
| Operating Temperature | ℃ | -5 to +70 |
| Storage Temperature | ℃ | -40 to +85 |

*Above specifications are for device without connector.

*For devices with connectors, IL will be 0.3dB higher, RL will be 5dB lower, ER will be 2dB lower and optical power is only 1000mW(CW).

*The material must be RoHS compliant.

## Package Dimensions

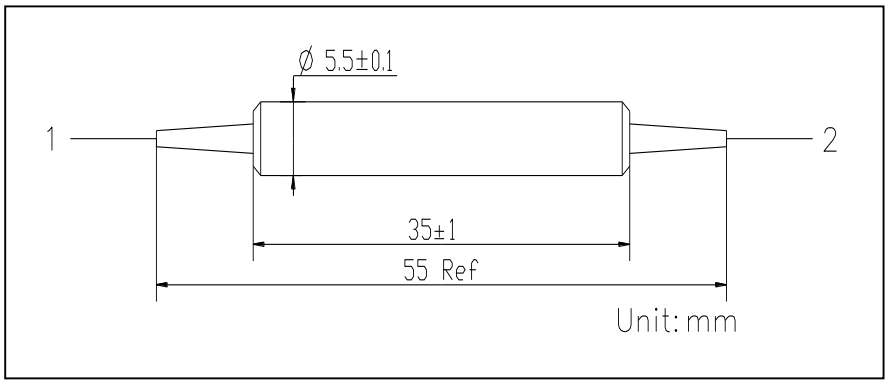


## Ordering Information

**HPMBPF**-①①①①-②②-③③-④-⑤-⑥⑥-⑦⑦-⑧-⑨⑨-⑩⑩

①①①①: Center Wavelength
1550 - 1550nm
SSSS - Specify

②②: Pass Band Width
02 - 2nm
SS - Specify

③③: Stop Band Width
08 - 8nm
SS - Specify

④:Handling Power
0.05 - 50mW
S - Specify

⑤: Axis Alignment
F - Fast Axis Blocked
B - Both Axis Working

⑥⑥: Connector Type on Port 1, 2
1B - FC/UPC
2B - FC/APC
3B - SC/UPC
4B - SC/APC
S - Specify
N - None

⑦⑦: Fiber Jacket on Port 1, 2
B - Bare Fiber
C - 900um Loose Tube(Red)
D - 900um Loose Tube(Blue )
E - 900um Loose Tube(Black )
S - Specify

⑧: Fiber Length
0.8 - 0.8 m
S - Specify

⑨⑨:Fiber Type
01B -PM1550 Fiber

⑩⑩ Package Type
01 - Ø5.5x35

# High Power Band Pass Filter 1550nm 10W

Spec Review No.: SR2306113A Date:Jun .28, 2023

## Specifications

| Parameters | Unit | Values |
|---|---|---|
| Nominal Center Wavelength | nm | 1550 |
| Max. Insertion Loss over 1550+/-1nm | dB | 0.9 |
| Min. Pass Band Width @0.5dB | nm | 2 |
| Max. Stop Band Width @25dB | nm | 8 |
| Max. PDL | dB | 0.1 |
| Min. Optical Return Loss | dB | 50 |
| Max. Optical Power (CW) | W | 1 |
| Max. Tensile Load | N | 5 |
| Fiber Type | -- | Corning SMF-28e Fiber |
| Operating Temperature | ℃ | -5 to +70 |
| Storage Temperature | ℃ | -40 to +85 |

*Above specifications are for device without connector.

*For devices with connectors, IL will be 0.3dB higher, RL will be 5dB lower .

*The material must be RoHS compliant.

## Package Dimensions

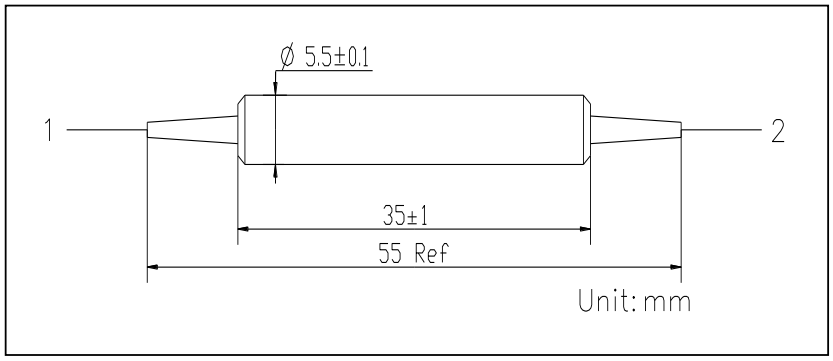


## Ordering Information

**HPBPF**-①①①①-②②-③③-④④-⑤⑤-⑥⑥-⑦-⑧⑧-⑨⑨

①①①①: Center Wavelength
1550 - 1550nm
SSSS - Specify

②②: Pass Band Width
02 - 2nm
SS - Specify

③③: Stop Band Width
08 - 8nm
SS - Specify

④④: Handing Power
01 - 1W
SS - Specify

⑤⑤: Connector Type on Port1,2
1B - FC/UPC
2B - FC/APC (Step)
3D - SC/UPC
4D - SC/APC (Step)
N - None
SS - Specify

⑥⑥: Fiber Jacket on Port 1,2
B - 250um Bare Fiber
F - 900um Loose Tube(White)
G - 900um Loose Tube(Yellow)
E - 900um Loose Tube(Black)
S - Specify

⑦: Fiber Length
0.8 - 0.8 m
S - Specify

⑧⑧:Fiber Type
02 - SMF-28e Fiber

⑨⑨: Package Type
01 - Ø5.5x35

# High Power Polarization Maintaining Circulator Hybrid 7xxnm 300mW

Spec Review No.: SR1905009B Date:May. 22, 2023

## Specifications

| Parameters | Unit | Values |
|---|---|---|
| Center Wavelength (λc) | nm | 780 |
| Operating Wavelength Range | nm | ±5 |
| Typ. Peak Isolation (2 to1, 3 to 2) | dB | 30 |
| Min. Isolation at 23℃ (2 to 1, 3 to2) | dB | 25 |
| Typ. Insertion Loss at 23℃ (1 to 2, 2 to3) | dB | 1.3 |
| Max. Insertion Loss at 23℃ (1 to 2, 2 to 3) | dB | 1.6 |
| Min. Extinction Ratio | dB | 20 |
| Min. Cross Talk | dB | 50 |
| Min. Return Loss | dB | 50 |
| Max. Average Power | W | 0.3 or Specify |
| Max. Tensile Load | N | 5 |
| Fiber Type | - | Nufern PM 780-HP Fiber |
| Operating Temperature | ℃ | -5 to +50 |
| Storage Temperature | ℃ | -20 to+75 |

*Above parameter only for inner core.

* Above specifications are for device without connector.

* For devices with connectors, IL will be 1dB higher, RL will be 5dB lower,ER will be 2dB lower & handling power will be only 1W(CW)

* The PM fiber and connector key are aligned to the slow axis.

* The material must be RoHS compliant.

## Package Dimensions

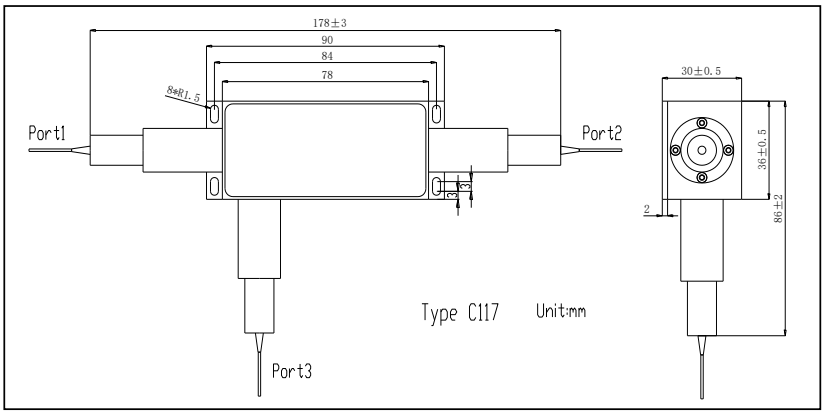


## Ordering Information

**HPMCIR**-①①-②②②-③-④④④-⑤⑤⑤-⑥⑥⑥-⑦⑦-⑧-⑨⑨⑨

①①: Wavelength
78 - 780nm
SS - Specify

②②②: Package Type
C117 - Type C117

③: Port Configuration
1 - 1x2

④④④: Connector Type
1A - FC/UPC
2A - FC/APC（Step）
N - None
S - Specify

⑤⑤⑤: Fiber Jacket
B - Bare Fiber
C - 900um loose tube(Red）
S - Specify

⑥⑥⑥: Fiber Length
1 - 1 m
S - Specify

⑦⑦: Handling Power
0.3 - 0.3W
S - Specify

⑧: Axis Alignment
F - Fast Axis Blocked

⑨⑨⑨: Fiber Type
37 - Nufern PM780-HP Fiber
S - Specify

# High Power Polarization Maintaining Circulator 8xxnm 300mW

Spec Review No.: SR2107003B Date:Sep. 19, 2023

## Specifications

| Parameters | Unit | Values |
|---|---|---|
| Center Wavelength (λc) | nm | 920 |
| Operating Wavelength Range | nm | ±10 |
| Typ. Peak Isolation (2 to1, 3 to 2) | dB | 25-30 |
| Min. Isolation at 23℃ (2 to 1, 3 to2) | dB | 20 |
| Typ. Insertion Loss at 23℃ (1 to 2, 2 to3) | dB | 1.6 |
| Max. Insertion Loss at 23℃ (1 to 2, 2 to 3) | dB | 2.0 |
| Min. Extinction Ratio | dB | 18 |
| Min. Cross Talk | dB | 50 |
| Min. Return Loss | dB | 50 |
| Max. Average Power @ Proper SOP | W | 1 or Specify |
| Max. Tensile Load | N | 5 |
| Fiber Type | - | Nufern PM 780-HP Fiber |
| Operating Temperature | ℃ | -5 to +50 |
| Storage Temperature | ℃ | -20 to+75 |

*Above specifications are for device without connector.

*For devices with connectors, IL will be 1.2dB higher, RL will be 5dB lower and ER will be 2dB lower & hangdling power will be only 1W(CW)

*The PM fiber and the key are aligned to the slow axis & fast axis is blocked.

*The material must be RoHS compliant.

## Package Dimensions

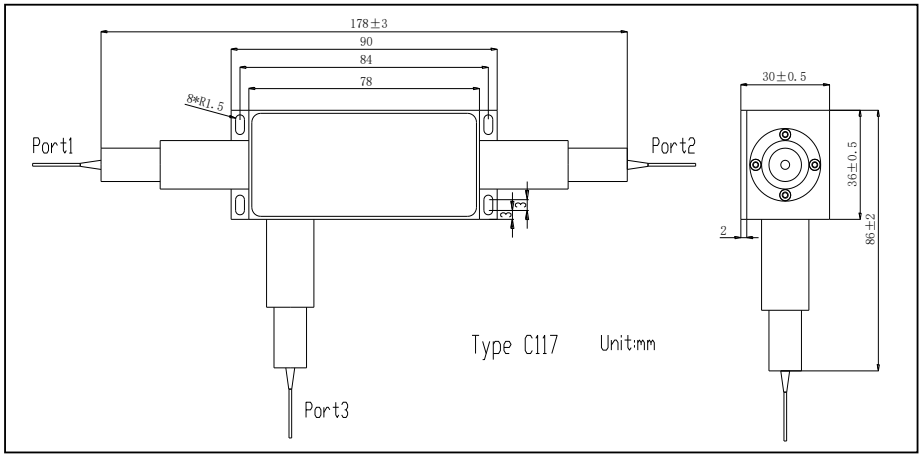


## Ordering Information

**HPMCIR**-①①-②-③-④④④-⑤⑤⑤⑤-⑥-⑦⑦-⑧-⑨⑨⑨

①①: Wavelength
92 - 920nm
S - Specify

②: Package Type
C117 - Type C117

③: Port Configuration
1 - 1x2
S - Specify

④④④: Connector Type on Port 1/2/3
1A - FC/UPC
2A - FC/APC(Step)
N - None
S - Specify

⑤⑤⑤: Fiber Jacket on Port 1/2/3
B - Bare Fiber
C - 900um Loose Tube(Red)
S - Specify

⑥: Fiber Length
1 - 1m
S - Specify

⑦⑦: Handling Power
01 -1W
S - Specify

⑧: Axis Alignment
F - Fast Axis Blocked

⑨⑨⑨: Fiber Type on Port 1/2/3
20 - PM 850 panda Fiber
37 - PM 780 panda Fiber
74 - Nufern PM 780-HP Fiber
S - Specify

# Polarization Insensitive Optical Circulator 8xxnm 300mW

Spec No.: CAT-05-076B Date:

## Specifications

| Parameter | Unit | Values |
|---|---|---|
| Center Wavelength | nm | 850 |
| Operating Wavelength Range | nm | ±10 |
| Max. Insertion loss(1→2,2→3), 23℃ | dB | 1.8 |
| Min. Isolation, (3→2, 2→1), 23℃ | dB | 23 |
| Min. Return loss | dB | 45 |
| Min. Cross talk | dB | 45 |
| Max.Polarization Dependent Loss | dB | 0.25 |
| Max. Optical Power (CW) | W | 1 |
| Max. Tensile Load | N | 5 |
| Operating Temperature | ℃ | 10 to +50 |
| Storage Temperature | ℃ | 0 to +60 |

*For devices with connectors, IL will be 0.5dB higher, RL will be 5dB lower,handling power will be only 1W(CW).

*For pulse applications, pls discuss with Optizone Technology.

*The material must be RoSH compliant.

## Package Dimensions

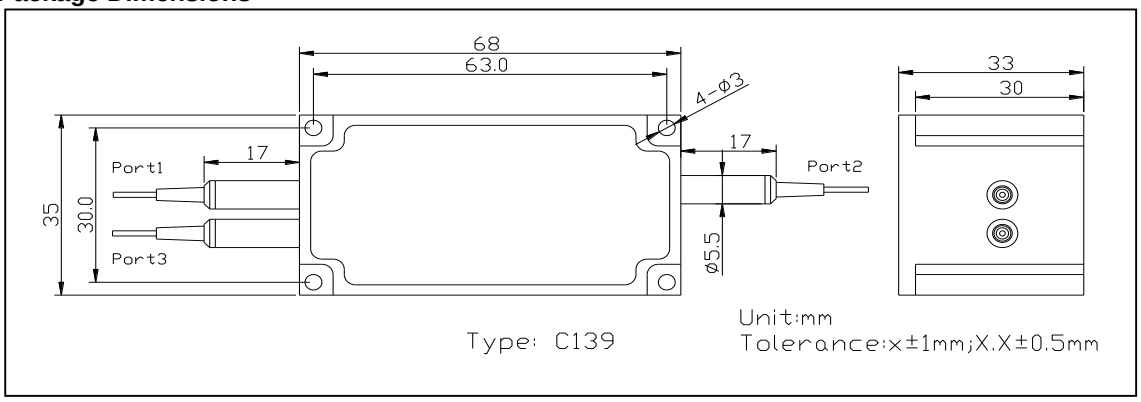


## Ordering Information

**FCIR**-①①-②-③-④④④-⑤⑤⑤-⑥-⑦⑦-⑧⑧⑧

①①: Wavelength
85 - 850nm
S - Specify

②:Package Type
C139 - Type C139
S - Specify

③:Port Configuration
1 - 1x2

④④④: Connector Type on Port 1/2/3
1A - FC/UPC
2A - FC/APC(Step)
N - None

⑤⑤⑤: Fiber Jacket on Port 1/2/3
B - Bare Fiber
F - 900um Loose Tube(White)
S - Specify

⑥: Fiber Length
1 - 1m
S - Specify

⑦⑦:Handling Power
01 - 1W
S - Specify

⑧⑧⑧:Fiber Type on Port 1/2/3
38 - HI 780 Fiber
112- Nufern HI780-HP fiber
S - Specify

# Polarization Maintaining Optical Circulator 10xxnm 300mW

Spec No.: CAT-09-013D Date:

**Specifications**

| Parameter | Unit | Values |
|---|---|---|
| Center Wavelength | nm | 1064 |
| Operating Wavelength Range | nm | ±5 |
| Typ. Insertion Loss (1→2, 2→3) | dB | 1.8 |
| Max. Insertion Loss (1→2, 2→3) | dB | 2.1 |
| Typ. Isolation (3→2, 2→1) | dB | 30 |
| Min. Isolation at 23°C (3→2, 2→1) | dB | 25 |
| Min. Return Loss | dB | 50 |
| Min. Extinction Ratio | dB | 20 |
| Min. Cross Talk | dB | 50 |
| Max. Optical Power (CW) | mW | 300 |
| Max. Tensile Load | N | 5 |
| Fiber Type | - | PM Panda Fiber |
| Operating Temperature | ℃ | -5 to + 50 |
| Storage Temperature | ℃ | -40 to +85 |

*Above specifications are for device without connector.

*For devices with connectors, IL will be 0.5dB higher, RL will be 5dB lower and ER will be 2dB lower.

*The PM fiber and the key are aligned to the slow axiscast axis is blocked.

**Package Dimensions**

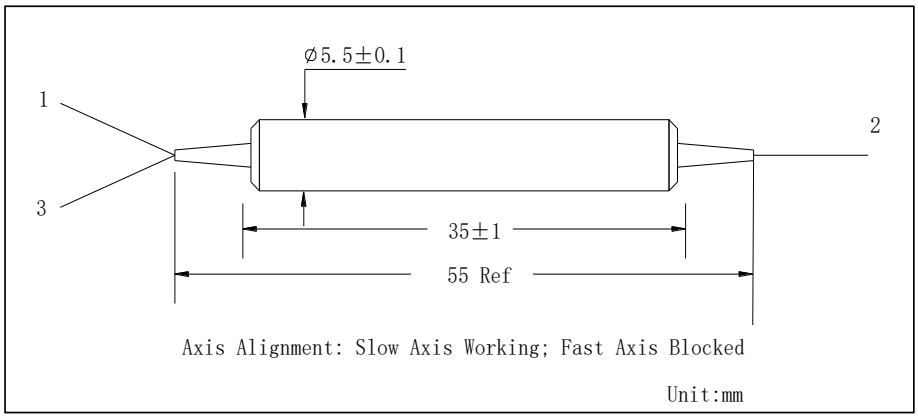


Ordering Information

**PMCIR**-①①-②-③-④④④-⑤⑤⑤-⑥-⑦-⑧

①①: Wavelength
06 - 1064nm
SS- Specify

②: Type
B - Type B

③: Port
1 - 1x2

④④④: Connector Type on Port 1, 2 & 3
1A- FC/UPC
2A - FC/APC
3D - SC/UPC
4D - SC/APC
N - None
S - Specify

⑤⑤⑤: Fiber Jacket on Port 1, 2 & 3
B - Bare Fiber
C - 900um Losse tube (Red)
D - 900um Losse tube (Blue)
S - Specify

⑥: Fiber Type
4A - PM980 Fiber
SS - Specify

⑦: Fiber Length
1 - 1.0m
S - Specify

⑧: Package Dimensions
01 - Ø5.5x35

# Polarization Maintaining Optical Circulator 10xxnm 300mW

Spec No.: CAT-09-012D Date:

**Specifications**

| Parameter | Unit | Values |
|---|---|---|
| Center Wavelength | nm | 1064 |
| Operating Wavelength Range | nm | ±5 |
| Typ. Insertion Loss (1→2, 2→3, 3→4, 4→1), 23°C | dB | 2.1 |
| Max. Insertion Loss (1→2, 2→3, 3→4, 4→1), -5~50°C | dB | 2.8 |
| Min. Isolation (1→4, 4→3, 3→2, 2→1), 23°C | dB | 28 |
| Min. Isolation (1→4, 4→3, 3→2, 2→1), -5~50°C | dB | 20 |
| Min. Return Loss | dB | 50 |
| Min. Extinction Ratio | dB | 20 |
| Min. Cross Talk | dB | 50 |
| Max. Optical Power ( CW, total ) | mW | 300 |
| Max. Tensile Load | N | 5 |
| Fiber Type | - | PM Panda Fiber |
| Operating Temperature | ℃ | -5 to + 50 |
| Storage Temperature | ℃ | -40 to +85 |

*Above specifications are for device without connector.

*For devices with connectors, IL will be 0.5dB higher, RL will be 5dB lower, and ER will be 2dB lower.

*The PM fiber and the key are aligned to the slow axis, and fast axis blocked.

**Package Dimensions**

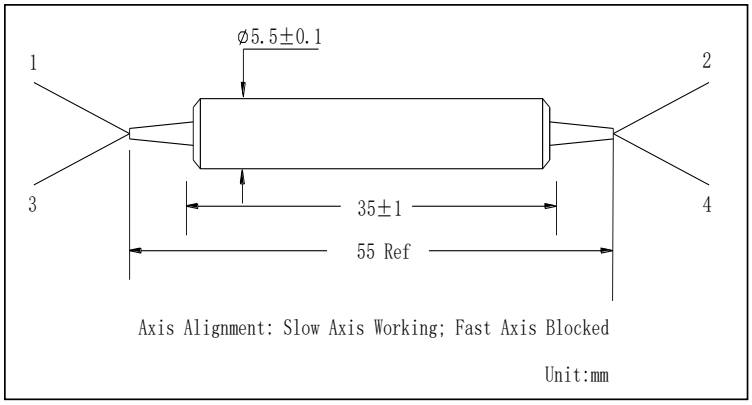


**Ordering Information**

**PMCIR**-①①-②-③-④④④④-⑤⑤⑤⑤-⑥-⑦-⑧

①①: Wavelength
06 - 1064nm
SS- Specify

②: Type
B - Type B

③: Port
2 - 2x2

④④④④: Connector Type on Port 1, 2, 3 & 4
1A- FC/UPC
2A - FC/APC
3D - SC/UPC
4D - SC/APC
N - None
S - Specify

⑤⑤⑤⑤: Fiber Jacket on Port 1, 2, 3 & 4
B - Bare Fiber
C - 900um Losse tube (Red)
D - 900um Losse tube (Blue)
S - Specify

⑥: Fiber Type
4A - PM980 Fiber
SS - Specify

⑦: Fiber Length
1 - 1.0m
S - Specify

⑧: Package Dimensions
01 - Ø5.5x35

# Polarization Insensitive Optic Circulator 3 Ports 10xxnm 300mW

Spec No.:CAT-02-003F Date:

**Specifications**

| Parameter | Unit | Values |
|---|---|---|
| Center Wavelength | nm | 1064 |
| Operating Wavelength Range | nm | ± 10 |
| Max. Insertion Loss(1→2, 2→3)@1064nm, 23℃ | dB | 2.1, Typ.1.8 |
| Max. Insertion Loss(1→2, 2→3)@1064nm±10, 23℃ | dB | 2.8 |
| Typ. Isolation(3→2, 2→1), 23℃ | dB | 25 |
| Min. Isolation(3→2, 2→1), 23℃ | dB | 20 |
| Min. Directivity | dB | 45 |
| Min. Return Loss | dB | 50 |
| Max. PDL, 23℃ | dB | 0.2 |
| Max. Optical Power (CW, total) | mW | 300 |
| Max. Tensile Load | N | 5 |
| Fiber Type | - | HI 1060 Fiber |
| Operating Temperature | ℃ | -5 to +50 |
| Storage Temperature | ℃ | -40 to +85 |

*Above specifications are for device without connector.

*For devices with connectors, IL will be 0.3dB higher, RL will be 5dB lower.

**Package Dimensions**

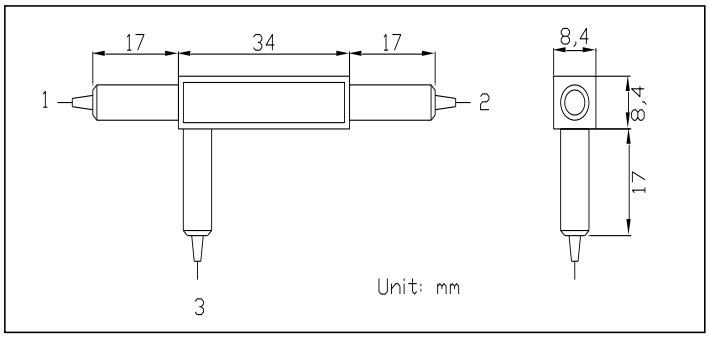


**Ordering Information**

**FCIR**-①①-②-③③③-④④④-⑤

①①: Wavelength
06 - 1064nm
SS - Specify

②: Port Type
1 - 1x2

③③③: Connector Type on Port 1, 2 & 3
1A- FC/UPC
2A - FC/APC
3D - SC/UPC
4D - SC/APC
N - None
S - Specify

④④④: Fiber Jacket on Port 1, 2 & 3
B - Bare Fiber
E - 900um Losse tube (Black)
F - 900um Losse tube (White)
R - 3mm Cable (Blue)
S - Specify

⑤: Fiber Length
1 - 1.0m
S - Specify

# High Power Polarization Maintaining Circulator 10xxnm 300mW ~50W

Spec Review No.: SR2309018A Date: Sep. 11, 2023

## Specifications

| Parameters | Unit | Values |
|---|---|---|
| Center Wavelength (λc) | nm | 1064 |
| Operating Wavelength Range | nm | ±5 |
| Max. Insertion Loss at 23℃ (1 to 2) | dB | 0.8 |
| Max. Insertion Loss at 23℃ (2 to 3) | dB | 1.0 |
| Min. Isolation at λc, 23℃ (2 to 1) | dB | 28 |
| Min. Isolation at λc, 23℃ (3 to2) | dB | 20 |
| Min. Extinction Ratio at 23℃(Port 2) | dB | 20 |
| Min. Cross Talk(1 to 3, 3 to 1) | dB | 50 |
| Min. Return Loss （All Port) | dB | 50 |
| Max. Average Power @ Proper SOP | W | 50 or Specify |
| Max. Peak Power | kW | 10 @ 10ns |
| Max. Tensile Load | N | 5 |
| Operating Temperature | ℃ | 10 to +50 |
| Storage Temperature | ℃ | 0 to+75 |

*Above specifications are for device without connector.

*For devices with connectors, IL will be 0.5dB higher, RL will be 5dB lower,ER will be 2dB lower & handling power will be only 1W(CW).

*The PM fiber and connector key are aligned to the slow axis.

*The material must be RoHS compliant.

## Package Dimensions

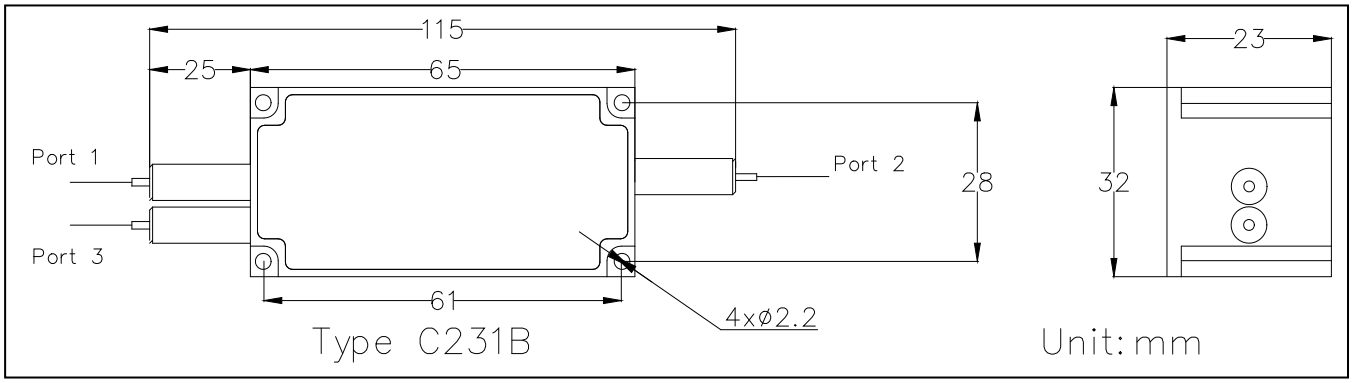


## Ordering Information

**HPMCIR**-①①-②-③-④④④-⑤⑤⑤-⑥-⑦⑦-⑧-⑨⑨⑨

①①: Wavelength
06 - 1064nm
S - Specify

②: Package Type
C231B - Type C231B

③: Port Configuration
1 - 1x2
S - Specify

④④④: Connector Type on Port 1/2/3
N - None
S - Specify

⑤⑤⑤: Fiber Jacket on Port 1/2/3
B - Bare Fiber

⑥: Fiber Length
1 - 1.0m
S - Specify

⑦⑦: Handling Power
50 - 50W
S - Specify

⑧: Axis Alignment
F - Fast Axis Blocked

⑨⑨⑨: Fiber Type on Port 1/2/3
45 - PLMA-GDF 10/125-M NA0.075 Fiber
S - Specify

# High Power Circulator 10xxnm 300mW~50W

Spec Review No.: SR2502003A Date: Feb. 6, 2025

## Specifications

| Parameter | Unit | Values |
|---|---|---|
| Center Wavelength (λc) | nm | 1064 |
| Operating Wavelength Range | nm | ±10 |
| Typ. Insertion Loss at 23℃, λc (1 to 2,2 to 3) | dB | 0.6 |
| Max.Insertion Loss at 23℃, λc (1 to 2) | dB | 0.8 |
| Max.Insertion Loss at 23℃, λc (2 to 3) | dB | 1.0 |
| Min. Isolation at 23℃, λc (2 to 1) | dB | 28 |
| Min. Isolation at 23℃, λc (3 to 2) | dB | 10 |
| Min. Return loss（All Port) | dB | 50 |
| Min. Cross Talk (1 to 3, 3 to 1) | dB | 50 |
| Max. Polarization Dependent Loss | dB | 0.2 |
| Max. Optical Average Power | W | 60 or Specify |
| Max. Peak Power | kW | 10@ 10ns |
| Max. Tensile Load | N | 5 |
| Operating Temperature | ℃ | +10 to +50 |
| Storage Temperature | ℃ | 0 to +60 |

*Above specifications are for device without connector.

*For devices with connectors, IL will be 0.5dB higher, RL will be 5dB lower & handling Power will be only 1W(CW).

*The material must be RoHS compliant.

## Package Dimensions

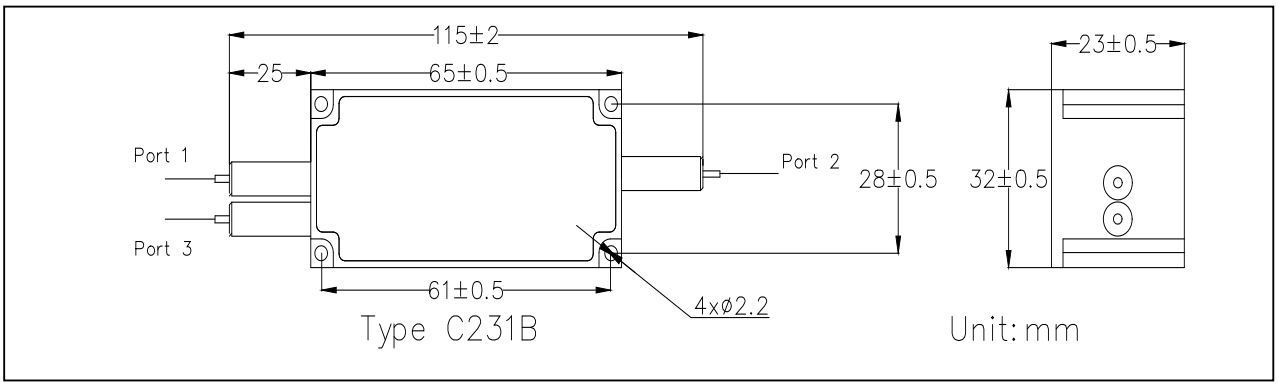


## Ordering Information

**HPCIR**-①①-②-③-④-⑤-⑥-⑦⑦-⑧

①①: Wavelength Range
06 - 1064nm
S - Specify

②:Package Type
C231B - Type C231B

③:Port Configuration
1 - 1x2

④: Connector Type
N - None
S - Specify

⑤: Fiber Jacket
B - Bare Fiber
S - Specify

⑥: Fiber Length
1 - 1m
S - Specify

⑦⑦:Handling Power
60 - 60W
S - Specify

⑧:Fiber Type on Port 1/2/3
104 - MMF 62.5/125 OM1 Fiber
108 - Nufern LMA-GDF-25/400-HP-M NA0.065 Fiber
113 - LMA-GDF-25/250-M NA0.065 Fiber
122 - Nufern LMA-GDF-14/250-HP-M,NA0.07 Fiber
S - Specify

# High Power Polarization Maintaining Circulator 10xxnm 300mW

Spec Review No.: SR2409011B Date: Sep.18.2024

## Specifications

| Parameters | Unit | Values |
|---|---|---|
| Center Wavelength (λc) | nm | 980,1030,1064 or Specify |
| Operating Wavelength Range | nm | ±10 |
| Typ. Insertion Loss at 23℃ (Port1 to Port2, Port2 to Port3) | dB | 0.6 |
| Max. Insertion Loss at 23℃ (Port1 to Port2, Port2 to Port3) | dB | 1.0 |
| Typ. Peak Isolation at 23℃ (Port2 to Port1, Port3 to Port2) | dB | 30 |
| Min. Isolation at λc,23℃ (Port2 to Port1, Port3 to Port2) | dB | 25 |
| Min. Extinction Ratio at 23℃ (Port1 to Port2, Port2 to Port3) | dB | 20 |
| Min. Cross Talk | dB | 50 |
| Min. Return Loss (Port1/Port2/Port3) | dB | 50 |
| Max. Average Power | W | 5 or Specify |
| Max. Peak Power | kW | 10 |
| Max. Tensile Load | N | 5 |
| Operating Temperature | ℃ | 10 to +50 |
| Storage Temperature | ℃ | -20 to+75 |

* Above specifications are for device without connector.
* For devices with connectors, IL will be 0.5dB higher, RL will be 5dB lower,ER will be 2dB lower & handling power will be only 1W(CW)
* The PM fiber and connector key are aligned to the slow axis.
* The material must be RoHS compliant.

## Package Dimensions

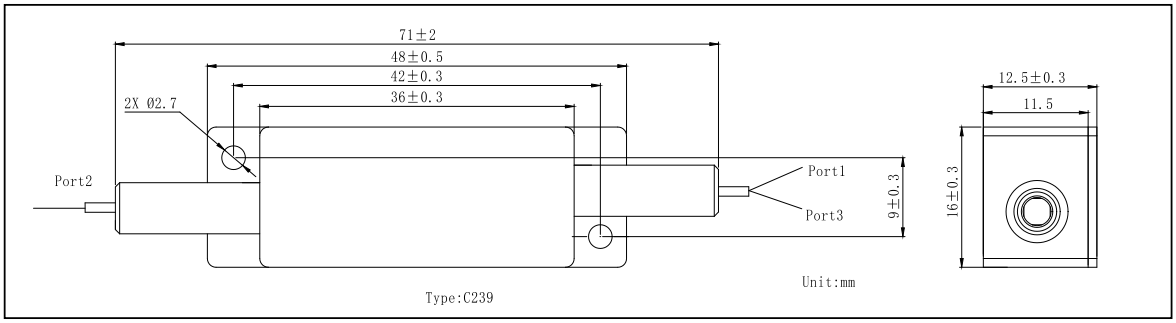


## Ordering Information

**HPMCIR**-①①-②-③-④-⑤-⑥-⑦-⑧-⑨

①①: Center Wavelength
98 - 980nm
03 - 1030nm
06 - 1064nm
S - Specify

②:Package Type
C239 - Type C239

③: Port Configuration
1 - 1x2
S - Specify

④: Connector Type
1A - FC/UPC
2A - FC/APC
N - None
S - Specify

⑤: Fiber Jacket
B - Baer Fiber
C - 900um Loose Tube(Red)
S - Specify

⑥:Fiber Length
0.6 - 0.6m
S - Specify

⑦: Average Power
05 - 5W
S - Specify

⑧:Axis Alignment
F - Fast Axis Blocked

⑨: Fiber Type
1 - PM980 Fiber
45 - PLMA-GDF 10/125-M NA0.075 Fiber
65 - Nufern PM1060L 10/125 GSF NA0.085 Fiber
90 - PM-98-025-B (长飞) Fiber
S - Specify

# Polarization Maintaining Optical Circulator 15xxnm 500mW

Spec No.: CAT-09-015E Date:

**Specifications**

| Parameter | Unit | Values | |
|---|---|---|---|
| Type | | Type A | Type B |
| Center Wavelength | nm | 1310 or 1550 | |
| Operating Wavelength Range | nm | ±30 | ±20 |
| Typ. Insertion Loss (1→2, 2→3) | dB | 0.7 | 0.6 |
| Max. Insertion Loss (1→2, 2→3) | dB | 0.9 | 0.8 |
| Min. Isolation, 23°C (3→2, 2→1) | dB | 40 | 20 |
| Typ. Isolation (3→2, 2→1) | dB | 46 | 30 |
| Min. Return Loss | dB | 50 | |
| Min. Extinction Ratio | dB | 22 | 20 |
| Min. Cross Talk | dB | 50 | |
| Max. Optical Power (CW) | mW | 500 | |
| Max. Tensile Load | N | 5 | |
| Fiber Type | - | PM Panda Fiber | |
| Operating Temperature | ℃ | -5 to +70 | |
| Storage Temperature | ℃ | -40 to +85 | |

*Above specifications are for device without connector.

*For devices with connectors, IL will be 0.3dB higher, RL will be 5dB lower and ER will be 2dB lower.

*The PM fiber and the connector key are aligned to the slow axis.

**Package Dimensions**

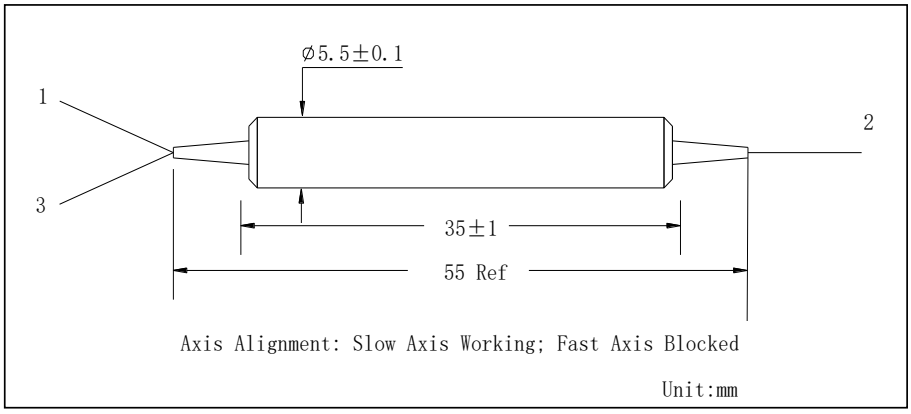


**Ordering Information**

**PMCIR**-①①-②-③-④④④-⑤⑤⑤-⑥-⑦-⑧

①①: Wavelength
- 31 - 1310nm
- 55 - 1550nm
- SS- Specify

②: Type
- A - Type A
- B - Type B

③: Port
- 1 - 1x2

④④④: Connector Type on Port 1, 2 & 3
- 1B- FC/UPC
- 2B - FC/APC
- 3D - SC/UPC
- 4D - SC/APC
- N - None
- S - Specify

⑤⑤⑤: Fiber Jacket on Port 1, 2 & 3
- B - Bare Fiber
- C - 900um Losse tube (Red)
- D - 900um Losse tube (Blue)
- E - 900um Losse tube (Black)
- S - Specify

⑥: Fiber Type
- 2B - PM1550 Fiber
- 3A - PM1310 Fiber
- SS - Specify

⑦: Fiber Length
- 1 - 1.0m
- S - Specify

⑧: Package Dimensions
- 01 - Ø5.5x35

# Polarization Maintaining Optical Circulator 15xxnm 500mW

Spec No.: CAT-09-014D Date:

**Specifications**

| Parameter | Unit | Values | |
|---|---|---|---|
| Type | | Type A | Type B |
| Center Wavelength | nm | 1310 or 1550 | |
| Operating Wavelength Range | nm | ± 30 | ± 20 |
| Typ. Insertion Loss | dB | 0.8 | 0.7 |
| Max. Insertion Loss | dB | 1.1 | 1.0 |
| Min. Isolation at 23℃ | dB | 40 | 20 |
| Typ. Isolation | dB | 50 | 30 |
| Min. Return Loss | dB | 50 | |
| Min. Extinction Ratio | dB | 20 | 20 |
| Min. Cross Talk (Port 1 to Port 3, Port 2 to Port 4) | dB | 50 | |
| Max. Optical Power (CW) | mW | 500 | |
| Max. Tensile Load | N | 5 | |
| Fiber Type | - | PM Panda Fiber | |
| Operating Temperature | ℃ | -5 to +70 | |
| Storage Temperature | ℃ | -40 to +85 | |

*Above specifications are for device without connector.

*For devices with connectors, IL will be 0.3dB higher, RL will be 5dB lower, and ER will be 2dB lower.

*The transmission optical path of A type is different from B type: A type: 1→2, 2→3, 3→4; B type: 1→2, 2→3, 3→4, 4→1.

*The PM fiber and the key are aligned to the slow axis.

**Package Dimensions**

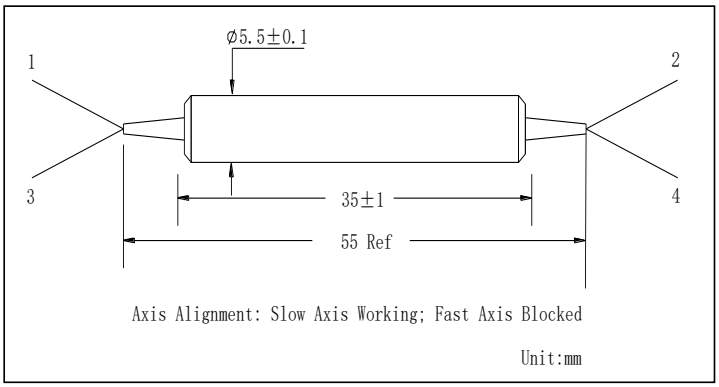


**Ordering Information**

**PMCIR**-①①-②-③-④④④④-⑤⑤⑤⑤-⑥-⑦-⑧

①①: Wavelength
- 31 - 1310nm
- 55 - 1550nm
- SS- Specify

②: Type
- A - Type A
- B - Type B

③: Port
- 2 - 2x2

④④④④: Connector Type on Port 1, 2, 3 & 4
- 1B- FC/UPC
- 2B - FC/APC
- 3D - SC/UPC
- 4D - SC/APC
- N - None
- S - Specify

⑤⑤⑤⑤: Fiber Jacket on Port 1, 2, 3 & 4
- B - Bare Fiber
- C - 900um Losse tube (Red)
- D - 900um Losse tube (Blue)
- E - 900um Losse tube (Black)
- S - Specify

⑥: Fiber Type
- 2B - PM1550 Fiber
- 3B - PM1310 Fiber
- SS - Specify

⑦: Fiber Length
- 1 - 1.0m
- S - Specify

⑧: Package Dimensions
- 01 - Ø5.5x35

# Polarization Insensitive Fiber Optic Circulator 15xxnm 500mW

Spec No.: CAT-02-002E Date:

**Specifications**

| Parameter | Unit | Values | | | |
|---|---|---|---|---|---|
| Center Wavelength | nm | 1310 | 1550 | C&L | 1610 |
| Operating Wavelength Range | nm | ±30 | ±30 | 1525~1610 | ±30 |
| Typ. Insertion loss(1→2, 2→3) | dB | 0.6 | | | |
| Max. Insertion loss(1→2, 2→3) | dB | 0.8 | | | |
| Typ. Isolation(3→2, 2→1) | dB | 50 | | | |
| Min. Isolation(3→2, 2→1) | dB | 40 | | | |
| Max. PDL | dB | 0.15 | | | |
| Max. PMD | ps | 0.1 | | | |
| Min. Return loss | dB | 50 | | | |
| Min. Cross talk | dB | 50 | | | |
| Max. Optical Power (CW) | mW | 500 | | | |
| Max. Tensile Load | N | 5 | | | |
| Fiber Type | - | SMF-28e Fiber | | | |
| Operating Temperature | ℃ | 0 to +70 | | | |
| Storage Temperature | ℃ | -40 to +85 | | | |
| Package Dimensions | mm | dia 5.5 x 50 (Bare fiber or 900um Loose Tube) | | | |
| | | 90x20x10 (2.0mm or 3.0mm Cable) | | | |

*Above specifications are for device without connector, and testing at 23℃.

*For devices with connectors, IL will be 0.3dB higher and RL will be 5dB lower.

**Package Dimensions**

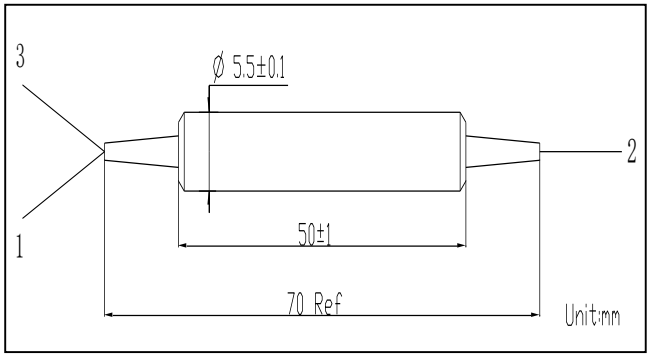


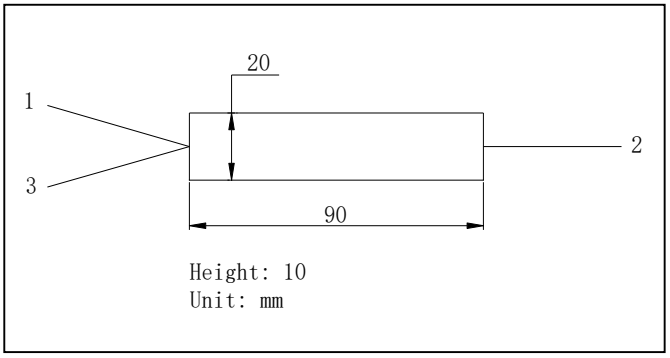


**Ordering Information**

**FCIR**-①①-②-③③③-④④④-⑤-⑥⑥

①①: Wavelength
- 31 - 1310nm
- 55 - 1550nm
- CL - C&L Band
- 61 - 1610nm
- SS - Specify

②: Port Type
- 1 - 1x2

③③③: Connector Type on Port 1, 2 & 3
- 1B- FC/UPC
- 2B - FC/APC
- 3D - SC/UPC
- 4D - SC/APC
- N - None
- S - Specify

④④④: Fiber Jacket on Port 1, 2 & 3
- B - Bare Fiber
- E - 900um Losse tube (Black)
- F - 900um Losse tube (White)
- R - 3mm Cable (Blue)
- S - Specify

⑤: Fiber Length
- 1 - 1.0m
- S - Specify

⑥⑥: Package Dimensions
- 03 - Ø5.5x50
- 82 - 90x20x10

# High Power Polarization Maintaining Circulator 15xxnm 10W

Spec Review No.: SR2302514A Date: May. 11, 2023

## Specifications

| Parameter | Unit | Values | |
|---|---|---|---|
| Type | - | Type A | Type B |
| Center Wavelength | nm | 1310 or 1550 | |
| Operating Wavelength Range | nm | ±30 | ±20 |
| Min. Isolation, 23℃ (3→2,2→1) | dB | 35 | 20 |
| Typ. Isolation (3→2,2→1) | dB | 40 | 30 |
| Typ. Insertion Loss (1→2,2→3) | dB | 0.8 | 0.7 |
| Max. Insertion Loss (1→2,2→3) | dB | 1 | 0.9 |
| Min. Return Loss | dB | 50 | |
| Min. Extinction Ratio | dB | 20 | |
| Min. Cross Talk (1→3) | dB | 50 | |
| Max. Optical Power (CW, SOP) | W | 1, 3, 5, 10 or Specify | |
| Max. Tensile Load | N | 5 | |
| Fiber Type | - | PM Panda Fiber | |
| Operating Temperature | ℃ | -5 to +70 | |
| Storage Temperature | ℃ | -40 to +85 | |

*Above specifications are for device without connector.

*For devices with connectors, IL will be 0.3dB higher, RL will be 5dB lower, ER will be 2dB lower, and Optical power is only 1W.

*The PM fiber and the connector key are aligned to the slow axis and fast axis is blocked.

*The material must be RoHS compliant.

## Package Dimensions

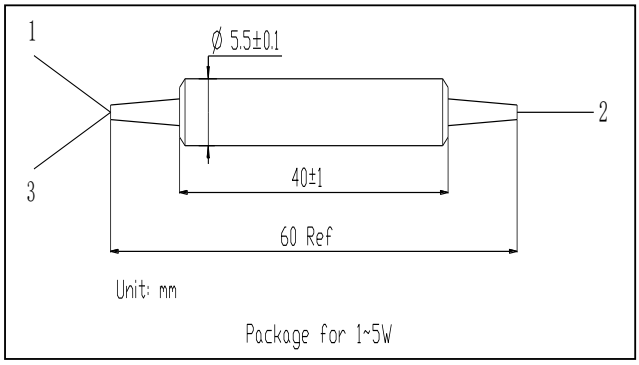


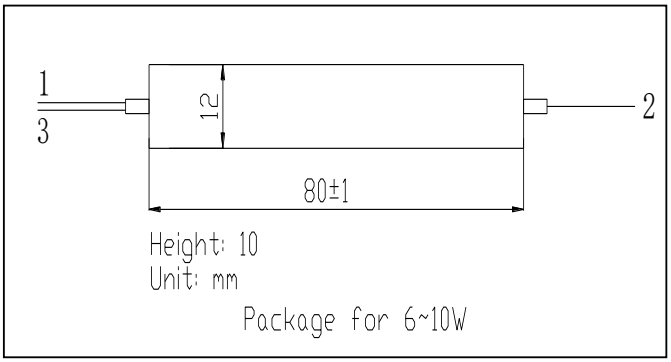


## Ordering Information

**HPMCIR**-①①-②-③-④④-⑤⑤⑤-⑥⑥⑥-⑦⑦-⑧-⑨⑨

①①: Wavelength
- 31 - 1310nm
- 55 - 1550nm
- SS - Specify

②: Type
- A - Type A
- B - Type B

③: Port
- 1 - 1x2

④④: Handling Power
- 01 - 1W
- 05 - 5W
- SS - Specify

⑤⑤⑤: Connector Type on Port 1, 2&3
- 1A- FC/UPC
- 2A - FC/APC
- 3D - SC/UPC
- 4D - SC/APC
- N - None
- S - Specify

⑥⑥⑥: Fiber Jacket on Port 1, 2&3
- B - Bare Fiber
- C - 900um Losse tube (Red)
- D - 900um Losse tube (Blue)
- E - 900um Losse tube (Black)
- S - Specify

⑦⑦: Fiber Type
- 2A - PM1550 Fiber
- 3A - PM1310 Fiber
- SS - Specify

⑧: Fiber Length
- 1 - 1.0m
- S - Specify

⑨⑨: Package Dimensions
- 02 - Ø5.5x40
- 08 - 80x12x10

# High Power Polarization Insensitive Circulator 15xxnm 10W

Spec Review No.: SR2302501A Date: May. 09, 2023

**Specifications**

| Parameter | Unit | Values |
|---|---|---|
| Center Wavelength | nm | 1310, 1550, or Specify |
| Operating Wavelength Range | nm | ±20 |
| Typ. Insertion Loss (1→2, 2→3) | dB | 0.9 |
| Max. Insertion Loss (1→2, 2→3) | dB | 1.2 |
| Min. Isolation (3→2, 2→1) | dB | 40 |
| Max. Polarization Dependent Loss | dB | 0.2 |
| Max. Polarization Mode Dispersion | ps | 0.1 |
| Min. Return loss | dB | 50 |
| Min. Cross talk (1→3) | dB | 50 |
| Max. Optical Power (CW,Total) | W | 1, 3, 5 ,10 or Specify |
| Max. Tensile Load | N | 5 |
| Fiber Type | - | SMF-28e Fiber |
| Operating Temperature | ℃ | -5 to +70 |
| Storage Temperature | ℃ | -40 to +85 |

*Above specifications are for device without connector, and testing at 23℃.

*For devices with connectors, IL will be 0.3dB higher and RL will be 5dB lowerand optical power is only 1W.

*The material must be RoHS compliant.

**Package Dimensions**

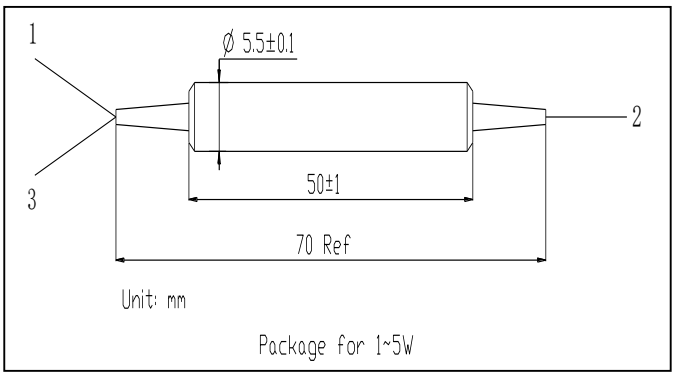


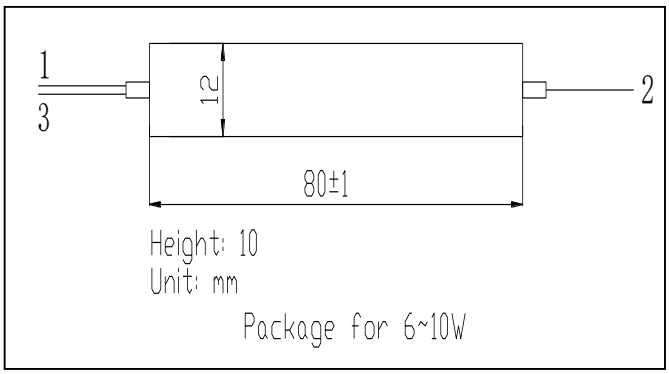


**Ordering Information**

**HPCIR**-①①-②-③③-④④④-⑤⑤⑤-⑥-⑦⑦

①①: Wavelength
31 - 1310nm
55 - 1550nm
SS - Specify

②: Port
1 - 1x2

③③: Power
01 - 1W
05 - 5W
10 - 10W
S - Specify

④④④: Connector Type on Port 1, 2 & 3
1A- FC/UPC
2A - FC/APC
3D - SC/UPC
4D - SC/APC
N - None
S - Specify

⑤⑤⑤: Fiber Jacket on Port 1, 2 & 3
B - Bare Fiber
E - 900um Losse tube (Black)
F - 900um Losse tube (White)
R - 3mm Cable (Blue)
S - Specify

⑥: Fiber Length
1 - 1.0m
S - Specify

⑦⑦: Package Dimensions
03 - Ø5.5x50
08 - 80x12x10

# Polarization Maintaining Optical Circulator 19xxnm 300mW

Spec No.: CAT-10-020C Date:

## Specifications

| Parameter | Unit | Values | | | |
|---|---|---|---|---|---|
| Type | | Type A | Type B | Type A | Type B |
| Center Wavelength | nm | 2000 | | | |
| Operating Wavelength Range | nm | ±30 | | | |
| Min. Isolation, 23℃ (3→2, 2→1) | dB | 35 | 18 | 35 | 18 |
| Typ. Isolation (3→2, 2→1) | dB | 45 | 25 | 45 | 25 |
| Typ. Insertion Loss (1→2, 2→3) | dB | 1.1 | 0.8 | 1.4 | 1.0 |
| Max. Insertion Loss (1→2, 2→3) | dB | 1.5 | 1.2 | 1.8 | 1.5 |
| Min. Return Loss | dB | 50 | | | |
| Min. Extinction Ratio | dB | 20 | | 18 | |
| Min. Cross Talk | dB | 50 | | | |
| Max. Optical Power (CW) | mW | 500 | | | |
| Max. Tensile Load | N | 5 | | | |
| Fiber Type | | PM 1550 Panda Fiber | | PM 1950 Panda Fiber | |
| Operating Temperature | ℃ | -5 to +70 | | | |
| Storage Temperature | ℃ | -40 to +85 | | | |

*Above specifications are for device without connector.

*For devices with connectors, IL will be 0.3dB higher, RL will be 5dB lower and ER will be 2dB lower.

*The PM fiber and the connector key are aligned to the slow axis.

## Package Dimensions

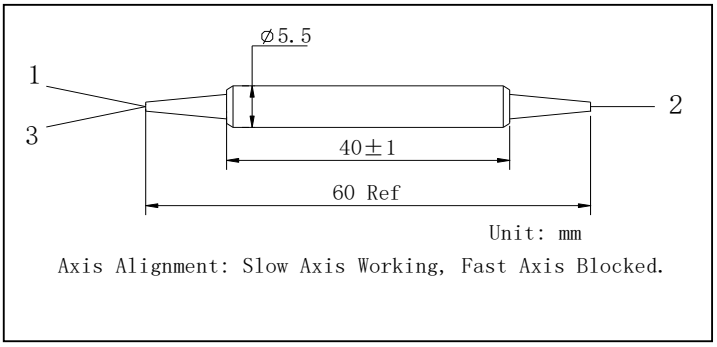


## Ordering Information

**PMCIR**-①①-②-③-④④④-⑤⑤⑤-⑥-⑦-⑧

①①: Wavelength
- 20 - 2000nm
- SS - Specify

②: Type
- A - Type A
- B - Type B

③: Port
- 1 - 1x2

④④④: Connector Type on Port 1, 2 & 3
- 1A- FC/UPC
- 2A - FC/APC
- 3D - SC/UPC
- 4D - SC/APC
- N - None
- S - Specify

⑤⑤⑤: Fiber Jacket on Port 1, 2 & 3
- B - Bare Fiber
- C - 900um Losse tube (Red)
- D - 900um Losse tube (Blue)
- S - Specify

⑥: Fiber Type
- 1C - PM1950 Fiber
- 2A - PM1550 Fiber
- SS - Specify

⑦: Fiber Length
- 1 - 1.0m
- S - Specify

⑧: Package Dimensions
- 02 - Ø5.5x40

# High Power Polarization Insensitive Optical Circulator 19xx~20xxnm 300mW~10W

Spec Review No.: SR1812009B Date: May. 09, 2023

## Specifications

| Parameter | Unit | Values |
|---|---|---|
| Center Wavelength | nm | 2000 |
| Operating Wavelength Range | nm | ±20 |
| Max. Insertion Loss, 23℃ (1→2, 2→3), λc | dB | 1.5 |
| Min. Isolation, 23℃ (3→2, 2→1), λc | dB | 20 |
| Min. Return Loss | dB | 50 |
| Min. Cross Talk | dB | 50 |
| Max. Polarization Dependent Loss | dB | 0.2 |
| Max. Polarization Mode Dispersion | ps | 0.15 |
| Max. Optical Power (CW, Total) | W | 1, 3, 5 or Specify |
| Max. Tensile Load | N | 5 |
| Fiber Type | - | SMF-28e Fiber |
| Operating Temperature | ℃ | -5 to +70 |
| Storage Temperature | ℃ | -40 to +85 |

*Above specifications are for device without connector.

*For devices with connectors, IL will be 0.3dB higher, RL will be 5dB lower, and optical power is only 1000mW(CW).

*The material must be RoHS compliant.

## Package Dimensions

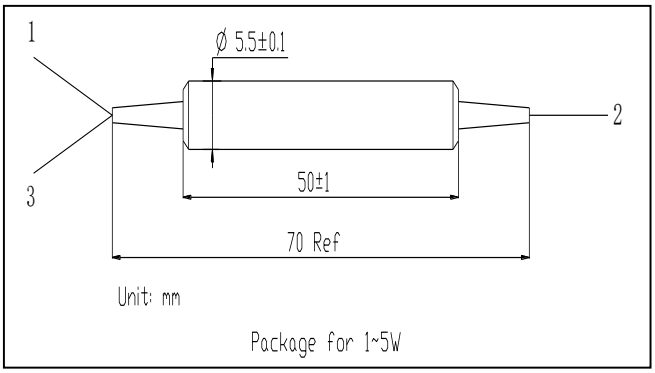


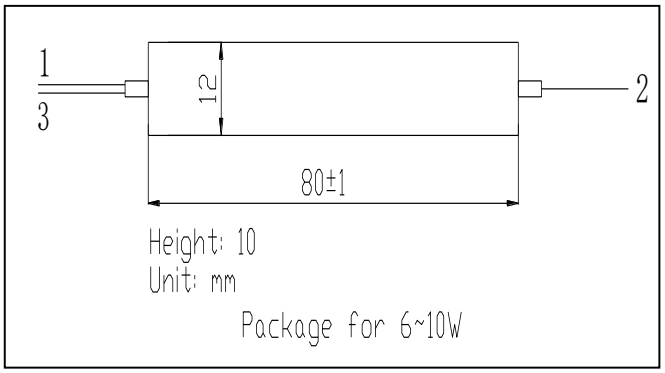


## Ordering Information

**HPCIR**-①①-②-③③-④④④-⑤⑤⑤-⑥-⑦⑦

①①: Wavelength
20 - 2000nm
SS - Specify

②: Port Type
1 - 1x2

③③: Optical Power
01 - 1W
05 - 5W
SS - Specify

④④④: Connector Type on Port 1, 2 & 3
1A- FC/UPC
2A - FC/APC
3D - SC/UPC
4D - SC/APC
N - None
S - Specify

⑤⑤⑤: Fiber Jacket on Port 1, 2 & 3
B - Bare Fiber
E - 900um Losse tube (Black)
F - 900um Losse tube (White)
R - 3mm Cable (Blue)
S - Specify

⑤⑤⑤: Fiber Jacket on Port 1, 2 & 3
B - 250um Bare Fiber
L - 900um Loose Tube
S - Specify

⑥: Fiber Length
1 - 1.0m
S - Specify

⑦⑦: Package Dimensions
03 - Ø5.5x50
08 - 80x12x10

# High Power Polarization Maintaining Optical Circulator 19xx~20xxnm 10W

Spec No.:CAT-05-067C Date:

## Specifications

| Parameter | Unit | Values | |
|---|---|---|---|
| Type | | Type A | |
| Center Wavelength | nm | 2000 | |
| Operating Wavelength Range | nm | ±30 | |
| Min. Isolation,23℃ | dB | 32 | |
| Typ. Insertion Loss | dB | 1.5 | |
| Max. Insertion Loss | dB | 1.8 | |
| Min. Extinction Ratio | dB | 20 | 18 |
| Min. Return Loss | dB | 50 | |
| Min. Cross Talk | dB | 40 | |
| Max. Optical Power (CW) | W | 1, 3, 5 or Specify | |
| Max. Tensile Load | N | 5 | |
| Fiber Type | | PM 1550 Panda Fiber | PM 1950 Panda Fiber |
| Operating Temperature | ℃ | -5 to + 70 | |
| Storage Temperature | ℃ | -40 to +85 | |

* Above specifications are for devices without the connectors.

* For devices with connectors, IL will be 0.3dB higher, RL will be 5dB lower, ER will be 2dB lower, and optical power is only 1000mW.

*The PM fiber and the connector key are aligned to the slow axis.

*For handling high power, proper alignment of polarization is necessary.

## Package Dimensions

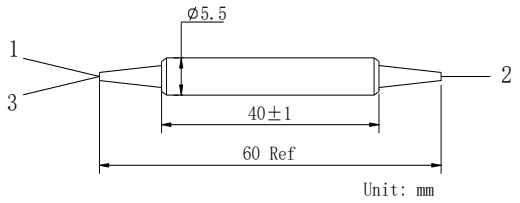


Axis Alignment: Slow Axis Working, Fast Axis Blocked.

Package for 1～5W

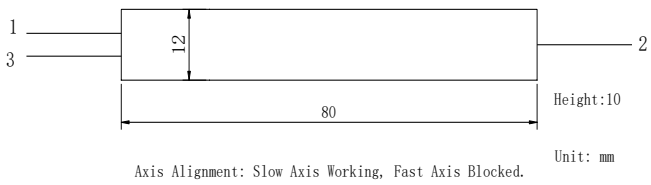


Axis Alignment: Slow Axis Working, Fast Axis Blocked.

Package for 6～10W

## Ordering Information

**HPMCIR-①①-②-③-④④-⑤⑤⑤-⑥⑥⑥-⑦-⑧-⑨**

①①: Wavelength
20 - 2000nm
SS - Specify

②: Type
A - Type A

③: Port
1 - 1X2

④④:Handling Power
01 - 1W
SS - Specify

⑤⑤⑤: Connector Type on Port 1, 2 & 3
1A- FC/UPC
2A - FC/APC
3D - SC/UPC
4D - SC/APC
N - None
S - Specify

⑥⑥⑥: Fiber Jacket on Port 1, 2 & 3
B - Bare Fiber
C - 900um Losse tube (Red)
D - 900um Losse tube (Blue)
S - Specify

⑦: Fiber Type
1C - PM1950 Fiber
2A - PM1550 Fiber
SS - Specify

⑧: Fiber Length
1 - 1.0m
S - Specify

⑨: Package Dimensions
02 - Ø5.5x40
08 - 80x12x10

# Polarization Maintaining Optical Circulator 20xxnm 300mW

Spec No.: CAT-10-034B Date:

## Specifications

| Parameter | Unit | Values | |
|---|---|---|---|
| Type | - | Type B | |
| Center Wavelength | nm | 2000 | |
| Operating Wavelength Range | nm | ±30 | |
| Typ. Insertion Loss | dB | 1.0 | 1.2 |
| Max. Insertion Loss | dB | 1.4 | 1.7 |
| Min. Isolation, 23℃ | dB | 18 | |
| Typ. Isolation | dB | 25 | |
| Min. Return Loss | dB | 50 | |
| Min. Extinction Ratio | dB | 20 | 18 |
| Min. Cross Talk | dB | 50 | |
| Max. Optical Power (CW) | mW | 500 | |
| Max. Tensile Load | N | 5 | |
| Fiber Type | - | PM 1550 Panda Fiber | PM 1950 Panda Fiber |
| Operating Temperature | ℃ | -5 to +70 | |
| Storage Temperature | ℃ | -40 to +85 | |

*Above specifications are for device without connector.

*The transmission optical path of B type: 1→2, 2→3, 3→4, 4→1.

*For devices with connectors, IL will be 0.3dB higher, RL will be 5dB lower and ER will be 2dB lower.

*The PM fiber and the connector key are aligned to the slow axis.

## Package Dimensions

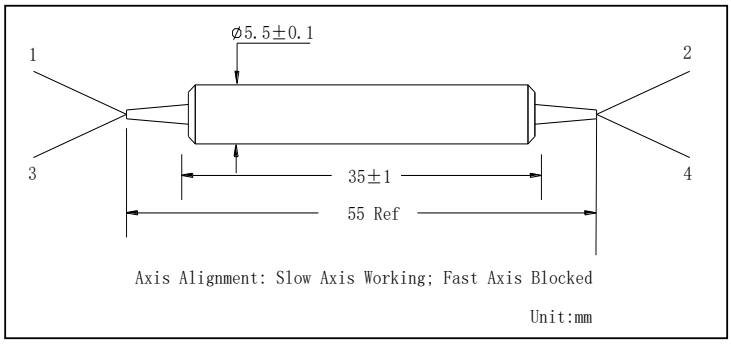


## Ordering Information

**PMCIR**-①①-②-③-④④④④-⑤⑤⑤⑤-⑥-⑦-⑧

①①: Wavelength
20 - 2000nm
SS - Specify

②: Type
B - Type B

③: Port
2 - 2x2

④④④④: Connector Type on Port 1, 2, 3 & 4
1A- FC/UPC
2A - FC/APC
3D - SC/UPC
4D - SC/APC
N - None
S - Specify

⑤⑤⑤⑤: Fiber Jacket on Port 1, 2, 3 & 4
B - Bare Fiber
C - 900um Losse tube (Red)
D - 900um Losse tube (Blue)
S - Specify

⑥: Fiber Type
1C - PM1950 Fiber
2A - PM1550 Fiber
SS - Specify

⑦: Fiber Length
1 - 1.0m
S - Specify

⑧: Package Dimensions
02 - Ø5.5x40

# Collimator 9xx~15xxnm 300mW

Spec No.: CAT-10-002C Date:

**Specifications**

| Parameters | Unit | Values |
|---|---|---|
| Center Wavelength | nm | 1310 or 1550 |
| Operating Wavelength Range | nm | ±30 |
| Working Distance | mm | 5 or Specify |
| Typ. Insertion Loss at 5mm WD | dB | 0.2 |
| Max. Insertion Loss at 5mm WD | dB | 0.25 |
| Min. Return Loss | dB | 60 |
| Max. PDL | dB | 0.02 |
| Max. Optical Power (CW) | mW | 500 |
| Max. Tensile Load | N | 5 |
| Fiber Type | | SMF-28e Fiber |
| Operating Temperature | ℃ | -5 to +70 |
| Storage Temperature | ℃ | -40 to +85 |

*Above specifications are for device without connector

*For devices with connectors, IL will be 0.3dB higher and RL will be 5dB lower.

*The material must be RoHS compliant.

**Package Dimensions**

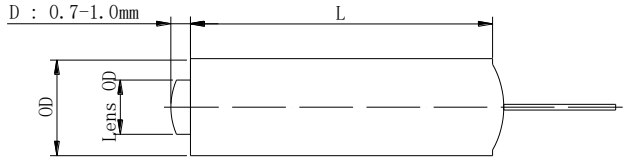


The D will be different when the focal Length of the Lens is over 2.5mm

Unit : mm

| | Glass Tube | Metal Holder |
|---|---|---|
| OD (for 1.8mm Lens Dia) | ⌀2.78±0.01 □ | ⌀3.2±0.02 □ |
| L (for 1.8mm Lens Dia) | 9.0±0.1 □ | 10±0.1 □<br>14±0.1 □ |
| OD (for 1.0mm Lens Dia) | ⌀1.4±0.02 □ | ⌀1.8±0.02 □ |
| L (for 1.0mm Lens Dia) | 9.0±0.1 □ | 10±0.1 □ |

**Ordering Information**

**C**-①-②-③-④-⑤-⑥⑥-⑦⑦-⑧-⑨-⑩-⑪⑪-⑫

①: Wavelength
1310 - 1310nm
1550 - 1550nm
3155 - 1310/1550nm
S - Specify

②: Pigtail Type
S - Single Fiber
D - Dual Fiber

③: Lens Diameter
1 - 1.8mm
2 - 1.0mm (for Single Fiber only)
S - Specify

④: Lens Type
G - Grin Lens
C - C Lens

⑤: Working Distance
5 - 5mm
15- 15mm
S - Specify

⑥⑥: Connector Type
1A - FC/UPC
2A - FC/APC (Step)
3D - SC/UPC
4D - SC/APC (Step)
N - None
S - Specify

⑦⑦: Fiber Jacket
B - Bare Fiber
E - 900um black Loose Tube
S - Specify

⑧: Fiber Type
5 - SMF-28e Fiber
O3 - YOFC PH1011-C fiber（G657A2）

⑨: Fiber Orientation
O - O Type (for Single Fiber)
V - Vertical (for Dual Fiber)

⑩: Fiber Length
1-1m
S - Specify

⑪⑪: Package Type
88 - Ø1.4x9 Glass
51 - Ø2.78x9 Glass
89 - Ø1.8x10
40 - Ø3.2x10
34 - Ø3.2x14
S - Specify

⑫: Nominal Beam Diameter
0.36 - 0.36mm @1550nm&1310nm
0.45 - 0.45mm @1550nm
0.32 - 0.32mm @1310nm
0.42 - 0.42mm @1310nm
S - Specify

# Fiber Collimator 9xx~10xxnm 300mW

Spec No.: CAT-10-001C Date:

**Specifications**

| Parameters | Unit | Values | | |
|---|---|---|---|---|
| Center Wavelength | nm | 850 | 980 | 1064 |
| Operating Wavelength Range | nm | ±20 | ±20 | ±30 |
| Working Distance | mm | 5 | 5 | 5 |
| Typ. Insertion Loss at 5mm | dB | 0.3 | 0.25 | 0.25 |
| Max. Insertion Loss at 5mm | dB | 0.35 | 0.3 | 0.3 |
| Min. Return Loss | dB | 55 | 55 | 60 |
| Max. PDL | dB | 0.02 | | |
| Max. Optical Power (CW) | mW | 300 | | |
| Max. Tensile Load | N | 5 | | |
| Fiber Type | | HI 780 Fiber | HI 1060 Fiber | HI 1060 Fiber |
| Operating Temperature | ℃ | -5 to +70 | | |
| Storage Temperature | ℃ | -40 to +85 | | |

*Above specifications are for device without connector.

*For devices with connectors, IL will be 0.5dB higher and RL will be 5dB lower.

*The material must be RoHS compliant.

**Package Dimensions**

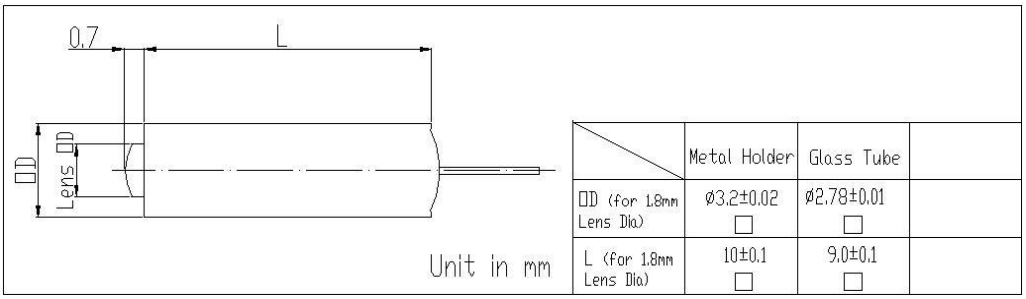


**Ordering Information**

**C**-①-②-③-④-⑤-⑥⑥-⑦⑦-⑧-⑨-⑩-⑪⑪-⑫

①: Wavelength
850 - 850nm
980 - 980nm
1064 - 1064nm
S - Specify

②: Pigtail Type
S - Single Fiber Pigtail
D - Dual Fiber Pigtail

③: Lens Diameter
1 - 1.8mm
2 - 1.0mm (for Single Fiber only)
S - Specify

④: Lens Type
G - Grin Lens
C - C Lens

⑤: Working Distance
1 - 5mm
S - Specify

⑥⑥: Connector Type
1B - FC/UPC
2B - FC/APC (Step)
3D - SC/UPC
4D - SC/APC (Step)
N - None
S - Specify

⑦⑦: Fiber Jacket
B - Bare Fiber
F - 900um White Loose Tube
S - Specify

⑧: Fiber Type
5 - HI 780
6 - HI 1060
S - Specify

⑨: Fiber Orientation
O - O Type (for Single Fiber)
V - Vertical (for Dual Fiber)

⑩: Fiber Length
0.8 - 0.8m
S - Specify

⑪⑪: Package Type
88 - Ø1.4x9 Glass
51 - Ø2.78x9 Glass
89 - Ø1.8x10
40 - Ø3.2x10
34 - Ø3.2x14
S - Specify

⑫: Nominal Beam Diameter
0.5 - 0.5mm
S - Specify

# High Power Polarization Maintaining Fiber Collimator 9xx~10xxnm 10W

Spec No.: CAT-05-014E Date:

**Specifications**

| Parameters | Unit | Values |
|---|---|---|
| Center Wavelength | nm | 1064 |
| Operating Wavelength Range | nm | ±20 |
| Nominal Beam Diamter | mm | 0.4 、0.5 、 0.9 or Specify |
| Working Distance | mm | 50 or Specify |
| Typ. Insertion Loss at 50mm | dB | 0.2~0.4 |
| Max. Insertion Loss at 50mm | dB | 0.5 |
| Min. Return Loss | dB | 50 |
| Typ. Extinction Ratio | dB | 25 |
| Min. Extinction Ratio | dB | 22 |
| Max. Optical Power (CW) | W | 3、 5、 10 or Specify |
| Max. Peak Power for ns Pulse | kW | 10 |
| Max. Tensile Load | N | 5 |
| Operating Temperature | ℃ | -5 to +70 |
| Storage Temperature | ℃ | -40 to +85 |

**Package Dimensions**

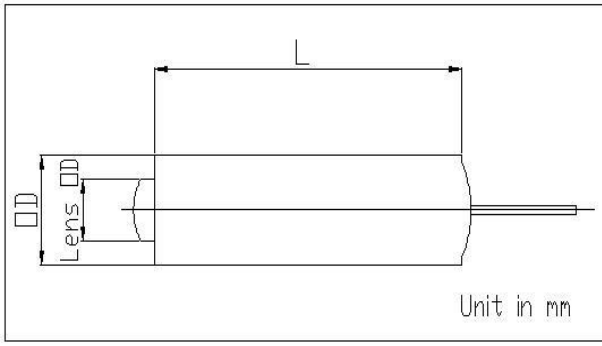


| | Lens □D | □D | L | |
|---|---|---|---|---|
| 1 | $\phi 1.8^{+0}_{-0.01}$ | ø3.2±0.02 | 10±0.1 | □ |
| 2 | $\phi 1.8^{+0}_{-0.01}$ | ø3.2±0.02 | 14±0.1 | □ |
| 3 | | | | □ |
| 4 | | | | □ |
| 5 | | | | □ |
| 6 | | | | □ |
| 7 | | | | □ |

**Ordering Information**

**HPMC**-①①-②②-③③-④-⑤⑤-⑥-⑦-⑧

①①: Wavelength
06 - 1064nm
SS - Specify

②②: Beam Diameter
04 - 0.4mm
05 - 0.5mm
09 - 0.9mm
SS - Specify

③③: Working Distance
50 - 50mm
SS - Specify

④: Fiber Jacket
L - 900um Loose Tube
C - 3mm Loose Cable
A - 3mm Armoured Cable
S - Specify

⑤⑤: Handling Power
03 - 3W
05 - 5W
10 - 10W
SS - Specify

⑥: Fiber Type
1 - PM Panda Fiber
S - Specify

⑦: Fiber Length
1.2 - 1.2m
S - Specify

⑧: Package Type
1 - Dia 3.2*10
2 - Dia 3.2*14

# High Power Fiber Collimator 9xx~10xxnm 10W

Spec No.: CAT-05-013D Date:

**Specifications**

| Parameters | Unit | Values |
|---|---|---|
| Center Wavelength | nm | 1064 |
| Operating Wavelength Range | nm | ±20 |
| Nominal Beam Diamter | mm | 0.4 、0.5 、 0.9 or Specify |
| Working Distance | mm | 50 or Specify |
| Typ. Insertion Loss at 50mm | dB | 0.2~0.4 |
| Max. Insertion Loss at 50mm | dB | 0.5 |
| Min. Return Loss | dB | 50 |
| Max. PDL | dB | 0.02 |
| Max. Optical Power (CW) | W | 3、 5、 10 or Specify |
| Max. Peak Power for ns Pulse | kW | 10 |
| Max. Tensile Load | N | 5 |
| Operating Temperature | ℃ | -5 to +70 |
| Storage Temperature | ℃ | -40 to +85 |

**Package Dimensions**

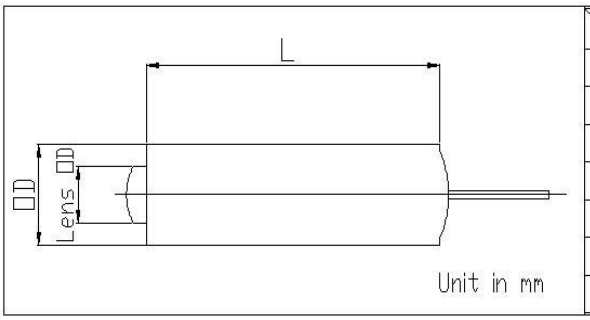


| | Lens □D | □D | L | |
|---|---|---|---|---|
| 1 | $\phi 1.8^{+0}_{-0.01}$ | ø3.2±0.02 | 10±0.1 | □ |
| 2 | $\phi 1.8^{+0}_{-0.01}$ | ø3.2±0.02 | 14±0.1 | □ |
| 3 | | | | □ |
| 4 | | | | □ |
| 5 | | | | □ |
| 6 | | | | □ |
| 7 | | | | □ |

**Ordering Information**

**HC**-①①-②②-③③-④-⑤⑤-⑥-⑦-⑧

①①: Wavelength
06 - 1064nm
SS - Specify

②②: Beam Diameter
04 - 0.4mm
05 - 0.5mm
09 - 0.9mm
SS - Specify

③③: Working Distance
50 - 50mm
SS - Specify

④: Fiber Jacket
L - 900um Loose Tube
C - 3mm Loose Cable
A - 3mm Armoured Cable
S - Specify

⑤⑤: Handling Power
03 - 3W
05 - 5W
10 - 10W
SS - Specify

⑥: Fiber Type
1 - HI 1060 Fiber

⑦: Fiber Length
1.5 - 1.5m
S - Specify

⑧: Package Type
1 - Dia 3.2*10
2 - Dia 3.2*14

# Polarization Maintaining Fiber Collimator 15xxnm 300mW

Spec No.: CAT-09-011C Date:

**Specifications**

| Parameters | Unit | Values |
|---|---|---|
| Center Wavelength | nm | 1310 or 1550 |
| Operating Wavelength Range | nm | ±30 |
| Working Distance | mm | 5 |
| Typ. Insertion Loss at 5mm WD | dB | 0.2 |
| Max. Insertion Loss at 5mm WD | dB | 0.25 |
| Min. Return Loss | dB | 60 |
| Typ. Extinction Ratio | dB | 25 |
| Min. Extinction Ratio | dB | 23 |
| Tensile Load | N | 5 |
| Max. Optical Power (CW) | mW | 500 |
| Fiber Type | | PM Panda Fiber |
| Operating Temperature | ℃ | -5 to +70 |
| Storage Temperature | ℃ | -40 to +85 |

*Above specifications are for device without connector.
*For devices with connectors, IL will be 0.3dB higher, RL will be 5dB lower and ER will be 2dB lower.
*The PM fiber & connector key are aligned to the slow axis.
*Tolerance of nominal beam diameter is ±10％.
*The material must be RoHS compliant.

**Package Dimensions**

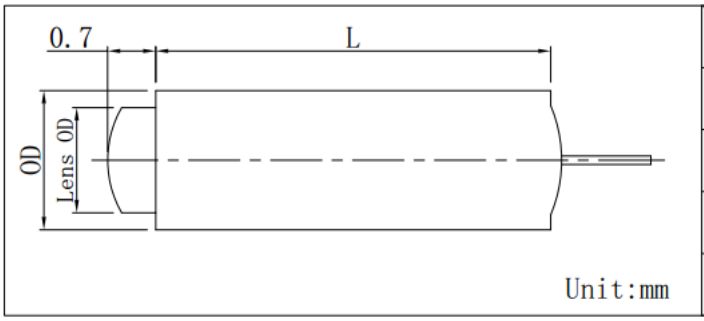


| | Metal Holder | Glass Tube |
|---|---|---|
| OD (For 1.8mm Lens Dia) | Φ3.2±0.02 □ | Φ2.78±0.02 □ |
| L (For 1.8mm Lens Dia) | 10±0.1 □ | 9.0±0.1 □ |
| OD (For 1.0mm Lens Dia) | Φ1.8±0.02 □ | Φ1.4±0.02 □ |
| L (For 1.0mm Lens Dia) | 9.0±0.1 □ | 7.0±0.1 □ |

**Ordering Information**

**PMC**-①-②-③-④-⑤-⑥⑥-⑦⑦-⑧-⑨-⑩-⑪-⑫-⑬

①: Wavelength
1310 - 1310nm
1550 - 1550nm
S - Specify

②: Pigtail Type
S - Single Fiber
D - Dual Fiber

③: Lens Diameter
1 - 1.8mm
2 - 1.0mm (for Single Fiber only)
S - Specify

④: Lens Type
G - Grin Lens
C - C Lens

⑤: Working Distance
5 - 5mm
S - Specify

⑥⑥: Connector Type
1B - FC/UPC
2B - FC/APC(Step)
3D - SC/UPC
4D - SC/APC(Step)
N - None
S - Specify

⑦⑦: Fiber Jacket
B - Bare Fiber
C - 900um Red Loose Tube

⑧:Fiber Type
2B - PM 1310
3B - PM 1550

⑨: Fiber Orientation
I - B - T - D - P - E - H - L
O - O Type

⑩: Fiber Length
0.8 - 0.8m
S - Specify

⑪: Package Dimensions
40 - Ø3.2x10 Metal
51 - Ø2.78x9 Glass
89 - Ø1.8×9 Metal
105 - Ø1.4×7 Glass

⑫: ER Level
B - ≥23dB

⑬: Nominal Beam Diameter
0.36 - 0.36mm at 1550nm
0.45 - 0.45mm at 1550nm only for C Lens
0.33 - 0.33mm at 1310nm
0.42 - 0.42mm at 1310nm only for C Lens
S - Specify

# High Power Polarization Maintaining Fiber Collimator 15xxnm 10W

Spec Review No.: SR2108006B Date: Jul. 21, 2023

## Specifications

| Parameters | Unit | Values |
|---|---|---|
| Center Wavelength | nm | 1550 |
| Operating Wavelength Range | nm | ± 20 |
| Nominal Beam Diameter | mm | 0.45 ±0.05 |
| Working Distance (WD) | mm | 4 or Specify |
| Max. Insertion Loss | dB | 0.25 |
| Typ. Extinction Ratio | dB | 25 |
| Min. Extinction Ratio | dB | 23 |
| Min. Return Loss | dB | 55 |
| Max. Pointing Angle @180mm WD | mrad | 36 [=ATAN(6.5mm /180mm)] |
| Fiber Type | - | PM 1550 Panda Fiber or Specify |
| Max. Optical Power (CW) | W | 1.0 or Specify |
| Max. Tensile Load | N | 5 |
| Operating Temperature | °C | -5 to +70 |
| Storage Temperature | °C | -40 to +85 |

*The material must be RoHS compliant.

## Package Dimensions

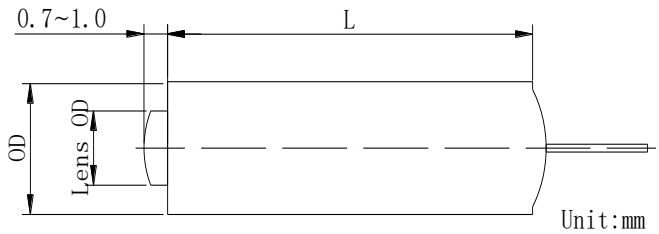


| | Glass Tube | Metal Holder |
|---|---|---|
| OD (for 1.8mm Lens Dia) | ∅2.78±0.01 □ | ∅3.2±0.02 □ |
| L (for 1.8mm Lens Dia) | 9.0±0.1 □ | 10±0.1 □ |

## Ordering Information

**HPMC-**①-②②-③-④-⑤⑤-⑥-⑦-⑧

①: Wavelength
1550 - 1550nm

②②: Beam Diameter
045 - 0.45mm

③: Working Distance
4 - 4mm
S - Specify

④: Fiber Jacket
B - Bare Fiber
C - 900um Red Loose Tube
SS - Specify

⑤⑤: Handling Power
01 - 1.0W
S - Specify

⑥: Fiber Type
3A - PM 1550
S - Specify

⑦: Fiber Length
1 - 1.0m
S - Specify

⑧: Package Type
40 - Ø3.2x10 Metal
51 - Ø2.78x9 Glass
S - Specify

# High Power Fiber Collimator 15xxnm 10W

Spec No.: CAT-05-018C Date:

**Specifications**

| Parameters | Unit | Values |
|---|---|---|
| Center Wavelength | nm | 1310, 1480 or 1550 |
| Operating Wavelength Range | nm | ±20 |
| Nominal Beam Diamter | mm | 0.4 、0.5 or Speciry |
| Working Distance | mm | 5 or Specify |
| Typ. Insertion Loss at 5mm WD | dB | 0.2 |
| Max. Insertion Loss at 5mm WD | dB | 0.3 |
| Min. Return Loss | dB | 50 |
| Max. PDL | dB | 0.02 |
| Max. Optical Power (CW) | W | 3 、 5、 10 or Specify |
| Max. Peak Power for ns Pulse | kW | 10 |
| Max. Tensile Load | N | 5 |
| Operating Temperature | ℃ | -5 to +70 |
| Storage Temperature | ℃ | -40 to +85 |

**Package Dimensions**

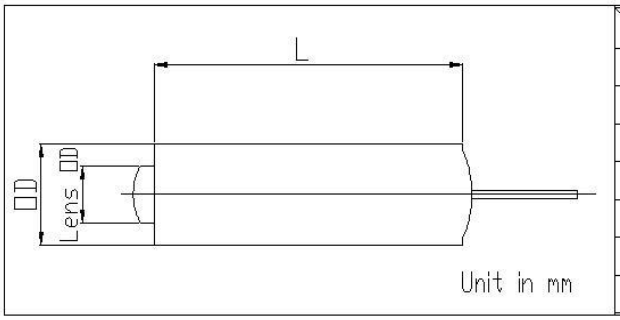


| | Lens OD | OD | L | |
|---|---|---|---|---|
| 1 | $\phi 1.8^{+0}_{-0.01}$ | ø3.2±0.02 | 10±0.1 | |
| 2 | | | | |
| 3 | | | | |
| 4 | | | | |
| 5 | | | | |
| 6 | | | | |
| 7 | | | | |

**Ordering Information**

**HC**-①①-②②-③③-④-⑤⑤-⑥-⑦-⑧

①①: Wavelength
31 - 1310nm
48 - 1480nm
55 - 1550nm
SS - Specify

②②: Beam Diameter
04 - 0.4mm
05 - 0.5mm
SS - Specify

③③: Working Distance
05 - 5mm
SS - Specify

④: Fiber Jacket
B - 250um Bare Fiber
L - 900um Loose Tube
C - 3mm Loose Cable
A - 3mm Armoured Cable
S - Specify

⑤⑤: Handling Power
03 - 3W
05 - 5W
10 - 10W
20 - 20W
SS - Specify

⑥: Fiber Type
1 - SMF-28e Fiber

⑦: Fiber Length
1.5 - 1.5m
S - Specify

⑧: Package Type
1 - Dia 3.2*10

# Polarization Maintaining Fiber Collimator 19xx~20xxnm 300mW

Spec Review No:SR1801011A Date:Jan.08,2018

## Specifications

| Parameters | Unit | Values |
|---|---|---|
| Center Wavelength | nm | 2000 |
| Operating Wavelength Range | nm | ±30 |
| Working Distance | mm | 5 or Specify |
| Typ. Transmission | - | 98% |
| Min. Transmission | - | 95% |
| Min. Return Loss | dB | 50 |
| Typ. Extinction Ratio | dB | 25 |
| Min. Extinction Ratio | dB | 23 |
| Max. Optical Power (CW) | mW | 500 |
| Max. Tensile Load | N | 5 |
| Fiber Type | - | PM 1950 Fiber |
| Operating Temperature | ℃ | -5 to +70 |
| Storage Temperature | ℃ | -40 to +85 |

## Package Dimensions

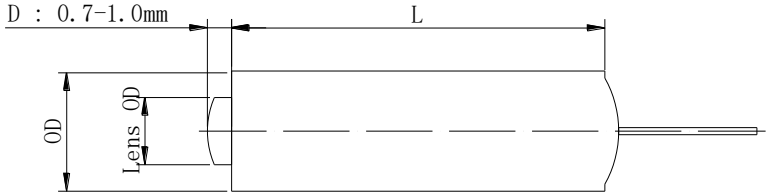


The D will be different when the focal Length of the Lens is over 2.5mm

Unit : mm

| | Glass Tube | Metal Holder |
|---|---|---|
| OD (for 1.8mm Lens Dia) | ⌀2.78±0.01 ☐ | ⌀3.2±0.02 ☐ |
| L (for 1.8mm Lens Dia) | 9.0±0.1 ☐ | 10±0.1 ☐<br>14±0.1 ☐ |
| OD (for 1.0mm Lens Dia) | ⌀1.4±0.02 ☐ | ⌀1.8±0.02 ☐ |
| L (for 1.0mm Lens Dia) | 9.0±0.1 ☐ | 10±0.1 ☐ |

## Ordering Information

**PMC**-①①-②-③-④-⑤-⑥-⑦-⑧-⑨-⑩-⑪-⑫⑫

①①: Wavelength
20 - 2000nm
SS - Specify

②: Pigtail Type
S - Single Fiber

③: Lens Diameter
1 - 1.8mm
S - Specify

④: Lens Type
C - C lens
G - Grin lens

⑤: Working Distance
1 - 5mm
S - Specify

⑥: Connector Type
1 - FC/UPC
2 - FC/APC
3 - SC/UPC
4 - SC/APC
N - None
S - Specify

⑦: Fiber Jacket
B - 250um Bare Fiber
L - 900um Loose Tube
S - Specify

⑧: Fiber Length
1 - 1.0m
S - Specify

⑨: Package Type
1 - Metal Holder
2 - Glass Tube
3 - Metal Holder 14mm

# Fiber Collimator 19xx~20xxnm 300mW

Spec Review No: SR2412072A Date: Dec. 17, 2024

## Specifications

| Parameters | Unit | Values |
|---|---|---|
| Center Wavelength | nm | 2000 |
| Operating Wavelength Range | nm | ±30 |
| Working Distance (WD) | mm | 10 or Specify |
| Nominal Beam Diameter at WD | mm | 0.47 ±0.05 |
| Typ. Transmissivity | - | 98% |
| Min Transmissivity | - | 95% |
| Min. Return Loss | dB | 55 |
| Max. PDL | dB | 0.03 |
| Max. Optical Power (CW) | mW | 500 |
| Max. Tensile Load | N | 5 |
| Operating Temperature | ℃ | -5 to +70 |
| Storage Temperature | ℃ | -40 to +85 |

*Above specifications are for device without connector

*For devices with connectors, IL will be 0.3dB higher and RL will be 5dB lower.

*The material must be RoHS compliant.

## Package Dimensions

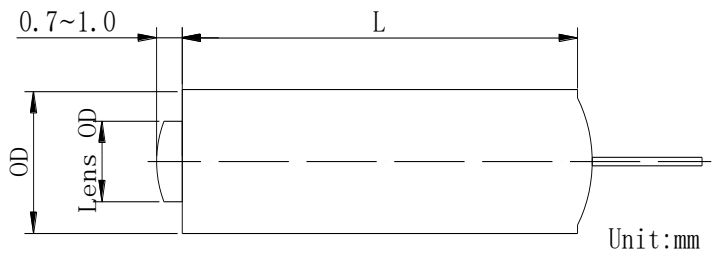


| | Glass Tube | Metal Holder |
|---|---|---|
| OD (for 1.8mm Lens Dia) | ∅2.78±0.01 □ | ∅3.2±0.02 □ |
| L (for 1.8mm Lens Dia) | 9.0±0.1 □ | 10±0.1 □ |

## Ordering Information

**C**-①-②-③-④-⑤-⑥-⑦-⑧-⑨-⑩-⑪-⑫

①: Wavelength
1950 - 1950nm
2000 - 2000nm

②: Pigtail Type
S - Single Fiber

③: Lens Diameter
1 - 1.8mm

④: Lens Type
C - C-Lens

⑤: Working Distance
10 - 10mm
S - Specify

⑥: Connector Type
1B - FC/UPC
2B - FC/APC (Step)
3D - SC/UPC
4D - SC/APC (Step)
N - None
S - Specify

⑦: Fiber Jacket
B - Bare Fiber
F - 900um Whtie Loose Tube
SS - Specify

⑧: Fiber Type
5 - SMF-28e
S - Specify

⑨: Fiber Orientation
O - O Type

⑩: Fiber Length
1 - 1.0m
S - Specify

⑪: Package Type
40 - Ø3.2×10 Metal
51 - Ø2.78×9 Glass

⑫: Nominal Beam Diameter
0.47 - 0.47mm

# High Power Polarization Maintaining Collimator 19xx~20xxnm 10W

Spec Review No: SR1310002B Date: Nov. 8, 2024

## Specifications

| Parameters | Unit | Values | |
|---|---|---|---|
| Center Wavelength | nm | 2000 | |
| Operating Wavelength Range | nm | ±50 | |
| Nominal Beam Diameter | mm | 0.48±0.05 or Specify | 0.6±0.05 or Specify |
| Working Distance (WD) | mm | 5 or Specify | |
| Typ. Insertion Loss at WD | dB | 0.2~0.4 | 0.6 |
| Max. Insertion Loss at WD | dB | 0.5 | 0.8 |
| Min. Return Loss | dB | 50 | |
| Typ. Extinction Ratio, 23℃ | dB | 25 | 23 |
| Min. Extinction Ratio, 23℃ | dB | 23 | 20 |
| Max. Optical Power (CW) | W | 3, 5 or Specify | |
| Max. Peak Power for ns Pulse | kW | 10 | |
| Fiber Type | - | PM 1550 | PM 1950 |
| Max. Tensile Load | N | 5 | |
| Operating Temperature | ℃ | -5 to +70 | |
| Storage Temperature | ℃ | -40 to +85 | |

*The material must be RoHS compliant.

## Package Dimensions

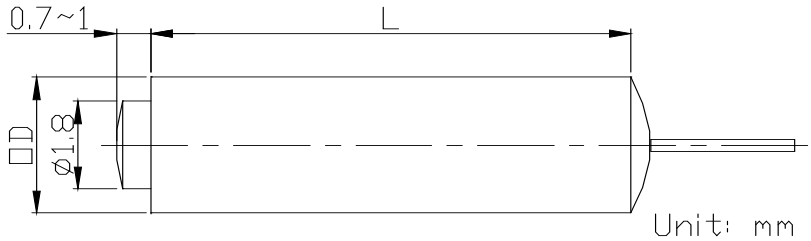


| | Glass Tube □ | Metal Holder □ |
|---|---|---|
| □D | ø2.78±0.01 | ø3.2±0.01 |
| L | 9±0.01 | 10±0.01 |

## Ordering Information

**HPMC-①-②②-③-④-⑤⑤-⑥-⑦-⑧**

①: Wavelength
2000 - 2000nm
S - Specify

②②: Beam Diameter
048 - 0.48mm
06 - 0.6mm
S - Specify

③: Working Distance
5 - 5mm
S - Specify

④: Fiber Jacket
B - Bare Fiber
C - 900um Red Loose Tube
SS - Specify

⑤⑤: Handling Power
03 - 3W
05 - 5W
SS - Specify

⑥: Fiber Type
3A - PM 1550
B10 - PM 1950

⑦: Fiber Length
1 - 1.0m
S - Specify

⑧: Package Type
40 - Ø3.2x10 Metal
51 - Ø2.78x9 Glass
S - Specify

# High Power Fiber Collimator 19xx~20xxnm 10W

Spec Review No.: SR2208016A Date: July. 26, 2022

## Specifications

| Parameters | Unit | Values |
|---|---|---|
| Center Wavelength | nm | 2000 |
| Operating Wavelength Range | nm | ±30 |
| Nominal Beam Diameter (1/e^2) | mm | 0.86 ±0.08 |
| Min. Beam Ellipticity (X/Y) | - | 90% |
| Working Distance (WD) | mm | 200 |
| Min. Transmissivity | - | 95% |
| Min. Return Loss | dB | 55 |
| Max. PDL | dB | 0.03 |
| Max. Optical Average Power | W | 1, 3, 5 or Spesify |
| Max. Optical Peak Power for ns Pulse | kW | 5 |
| Max. Tensile Load | N | 5 |
| Fiber Type | - | SMF-28e Fiber |
| Operating Temperature | ℃ | -5 to +70 |
| Storage Temperature | ℃ | -40 to +85 |

*The material must be RoHS compliant.

## Package Dimensions

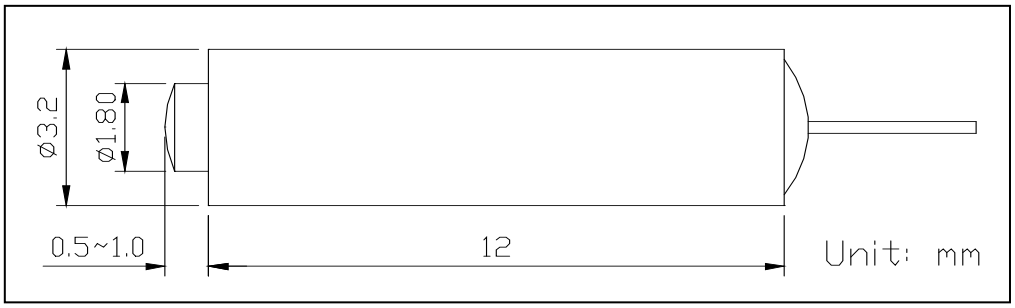


## Ordering Information

**HC**-①①-②-③-④-⑤⑤-⑥-⑦-⑧

①①: Wavelength
20 - 2000nm
SS - Specify

②: Beam Diameter
0.86 - 0.86mm
S - Specify

③: Working Distance
200 - 200mm
S - Specify

④: Fiber Jacket
D - 250um Bare Fiber
L - 900um Loose Tube
S - Specify

⑤⑤: Handling Power
01 - 1W
03 - 3W
05 - 5W
SS - Specify

⑥: Fiber Type
1 - SMF-28e Fiber

⑦: Fiber Length
0.8 - 0.8m
S - Specify

⑧: Package Type
9 - Dia 3.2*12

# In-line Polarizer 8xxnm 300mW

Spec No.: CAT-09-035D Date:

**Specifications**

| Parameters | Unit | Values |
|---|---|---|
| Center Wavelength | nm | 850 |
| Operating Wavelength Range | nm | ± 20 |
| Typ. Insertion Loss at 23°C | dB | 0.8 |
| Max. Insertion Loss at 23°C | dB | 1.0 |
| Min. Return Loss | dB | 50 |
| Typ. Extinction Ratio at 23°C（Input to Output） | dB | 30 |
| Min. Extinction Ratio at 23°C（Input to Output） | dB | 28 |
| Min. Extinction Ratio at 23°C（Output to Input） | dB | 21 (Only for PM Fiber on Input Port) |
| Max. Optical Power (CW) | mW | 300 |
| Max. Tensile Load | N | 5 |
| Operating Temperature | °C | -5 to +70 |
| Storage Temperature | °C | -40 to + 85 |

*Above specifications are for devices without connectors.
*For devices with connectors, IL will be 0.5dB higher, RL will be 5dB lower, and ER will be 2dB lower.
*The PM fiber and the connector key are aligned to the slow axis.
*The material must be RoHS compliant.

**Package Dimensions**

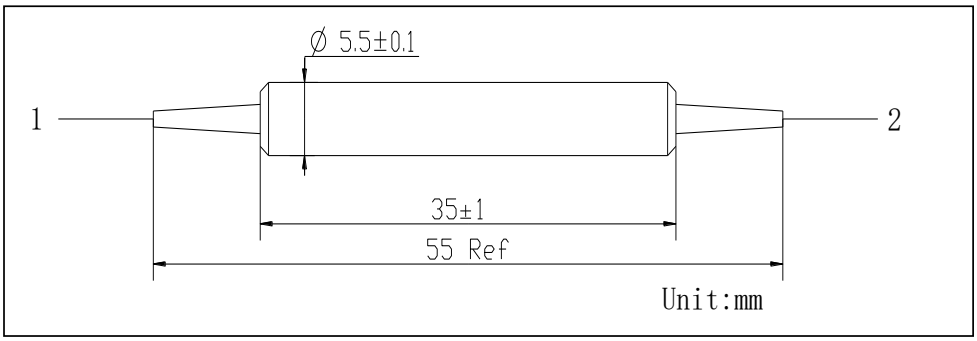


**Ordering information**

**ILP-**①-②-③③-④④-⑤-⑥-⑦

①: Wavelength
850 - 850nm
S - Specify

②: Handing Power
0.3 - 0.3W

③③: Connector Type on Port 1 & 2
1A - FC/UPC
2A - FC/APC
3D - SC/UPC
4D - SC/APC
N - None
S - Specify

④④: Fiber Jacket on Port 1 & 2
B - 250um Bare Fiber
C - 900um Red Loose Tube
F - 900um White Loose Tube
SS - Specify

⑤: Fiber Type on Port 1 & 2
J - PM 850 Panda Fiber
L - HI 780 Fiber
S - Specify

⑥: Fibre Length
0.8 - 0.8m
S - Specify

⑦: Package Type
01 - Ø5.5×35

# In-line Polarizer 10xxnm 300mW

Spec No.: CAT-09-002D Date:

**Specifications**

| Parameters | Unit | Values | | | |
|---|---|---|---|---|---|
| Center Wavelength | nm | 1064 | | | |
| Operating Wavelength Range | nm | ± 30 | | | |
| Typ. Insertion Loss at 23°C | dB | 0.4 | | | |
| Max. Insertion Loss at 23°C | dB | 0.6 | | | |
| Min. Return Loss | dB | 50 | | | |
| Typ. Extinction Ratio at 23°C（Input to Output） | dB | 30 | | | |
| Min. Extinction Ratio at 23°C（Input to Output） | dB | 28 | | | |
| Min. Extinction Ratio at 23°C（Output to Input） | dB | 22(Only for PM Fiber On Input Port) | | | |
| Min.PDL(Only for SMF on all ports)@23°C | dB | 25 | | | |
| Max. Optical Power (CW) | mW | 300 | | | |
| Max. Tensile Load | N | 5 | 5 | | |
| Operating Temperature | °C | -5 to +70 | | | |
| Storage Temperature | °C | -40 to + 85 | | | |

*Above specifications are for devices without connectors.

*For devices with connectors, IL will be 0.5dB higher, RL will be 5dB lower, and ER will be 2dB lower.

*The PM fiber and the connector key are aligned to the slow axis.

*The material must be RoHS compliant.

**Package Dimensions**

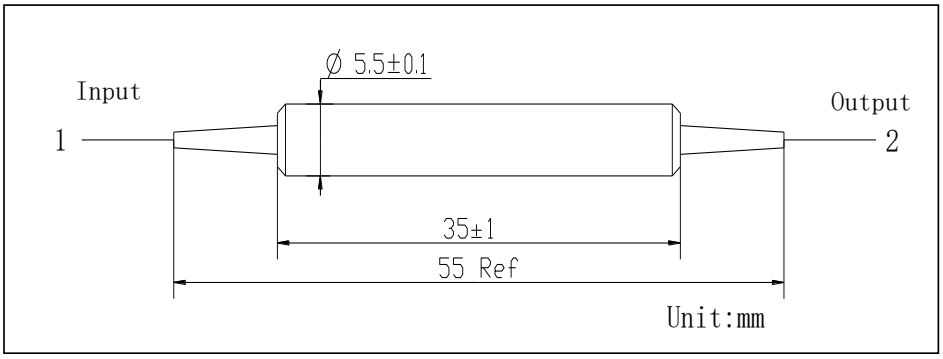


**Ordering information**

**ILP-**①-②-③③-④④-⑤-⑥-⑦

①: Wavelength
1064 - 1064nm
S - Specify

②: Handing Power
0.3 - 0.3W

③③: Connector Type on Port 1 & 2
1A - FC/UPC
2A - FC/APC
3D - SC/UPC
4D - SC/APC
N - None
S - Specify

④④: Fiber Jacket on Port 1 & 2
B - Bare Fiber
C - 900um Red Loose Tube
F - 900um White Loose Tube
S - Specify

⑤: Fiber Type on Port 1 & 2
1A - PM 980 Panda Fiber
7 - HI 1060 Fiber
S - Specify

⑥: Fibre Length
0.8 - 0.8m
S - Specify

⑦: Package Type
01 - Ø5.5×35

# In-line Polarizer 10xxnm 10W

Spec Review No.: SR0806012D

Date: May. 16, 2024

## Specifications

| Parameters | Unit | Values |
|---|---|---|
| Center Wavelength | nm | 1064 |
| Operating Wavelength Range | nm | ±30 |
| Typ. Insertion Loss at 23°C | dB | 0.5 |
| Max. Insertion Loss at 23°C | dB | 0.7 |
| Min. Return loss | dB | 50 |
| Typ. Extinction ratio at 23°C | dB | 30 |
| Min. Extinction Ratio at 23°C (Input to Output) | dB | 28 |
| Min. Extinction Ratio at 23°C (Output to Input ) | dB | 23 |
| Min.PDL(only for Hi 1060 fiber at all ports)at 23℃ | dB | 25 |
| Max. Optical Power (CW) | W | 1 or Specify |
| Max. Tensile Load | N | 5 |
| Operating Temperature | °C | -5 to +70 |
| Storage Temperature | °C | -40 to +85 |

*Above specifications are for devices without connectors.

*For devices with connectors, IL will be 0.3dB higher, RL will be 5dB lower and ER will be 2dB lower.

*The PM fiber and the connector key are aligned to the slow axis.

*The material must be RoHS compliant.

## Package Dimensions

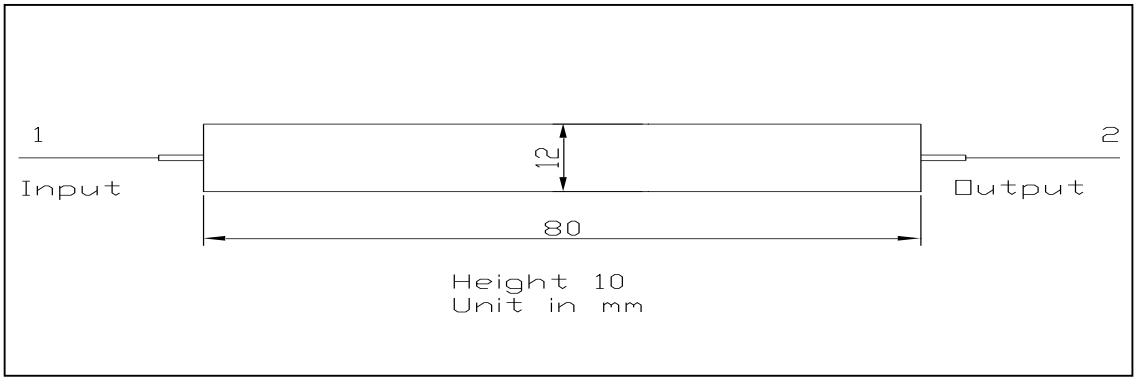


## Ordering information

**HILP**-①-②-③③-④④-⑤-⑥-⑦

①: Wavelength
1064 - 1064nm

②: Handing Power
1 - 1W
5 - 5W
10 - 10W
S - Specify

③③: Connector Type on Port 1 & 2
1A - FC/UPC
2A - FC/APC
3D - SC/UPC
4D - SC/APC
N - None
S - Specify

④④: Fiber Jacket on Port 1 & 2
B - 250um Bare Fiber
C - 900um Red Loose Tube
F - 900um White Loose Tube
S - Specify

⑤: Fiber Type on Port 1 & 2
1A - PM980 Fiber
7 - Hi1060 Fiber
S - Specify

⑥: Fibre Length
0.8 - 0.8m
S - Specify

⑦: Package Type
08 - 80×12×10

# In-line Polarizer 15xxnm 300mW

Spec No.: CAT-09-003E Date:

**Specifications**

| Parameters | Unit | Values |
|---|---|---|
| Center Wavelength | nm | 1310, 1480 or 1550 |
| Operating Wavelength Range | nm | ±50 |
| Typ. Insertion Loss at 23°C | dB | 0.3 |
| Max. Insertion Loss at 23°C | dB | 0.5 |
| Min. Return loss | dB | 50 |
| Typ. Extinction Ratio at 23°C（Input to Output） | dB | 30 |
| Min. Extinction Ratio at 23°C（Input to Output） | dB | 28 |
| Min. Extinction Ratio at 23°C（Output to Input） | dB | 23(Only for PM Fiber on Input Port) |
| Min. PDL(Only for SMF on all ports)@23°C | dB | 25 |
| Max. Optical Power (CW) | mW | 500（Based on proper polarization alignment) |
| Max. Tensile Load | N | 5 |
| Fiber Type | - | PM Panda Fiber or SMF-28e |
| Operating Temperature | °C | -5 to +70 |
| Storage Temperature | °C | -40 to +85 |

*Above specifications are for devices without connectors.

*For devices with connectors, IL will be 0.3dB higher, RL will be 5dB lower and ER will be 2dB lower.

*The PM fiber and the connector key are aligned to the slow axis.

*The material must be RoHS compliant.

**Package Dimensions**

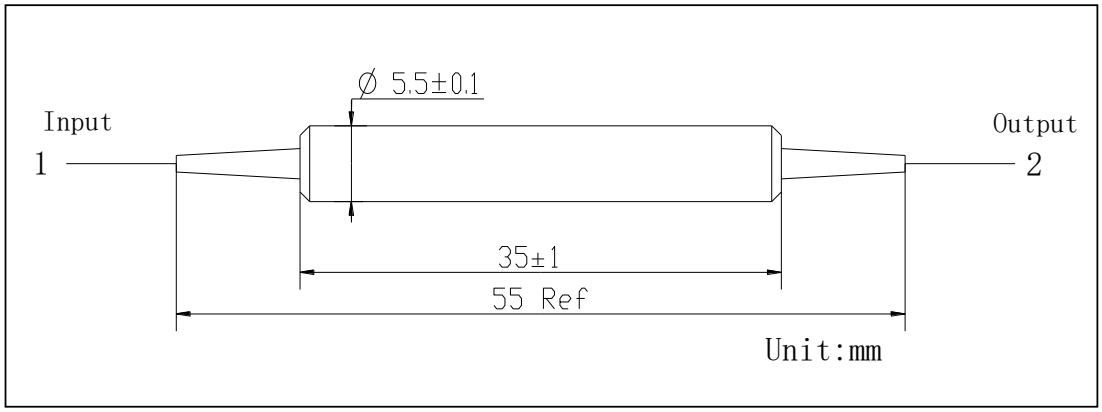


**Ordering information**

**ILP-**①-②-③③-④④-⑤-⑥-⑦

①: Wavelength
1550 - 1550nm
S - Specify

②: Handing Power
0.5 - 0.5W

③③: Connector Type on Port 1 & 2
1B - FC/UPC
2B - FC/APC
3D - SC/UPC
4D - SC/APC
N - None
S - Specify

④④: Fiber Jacket on Port 1 & 2
B - 250um Bare Fiber
C - 900um Red Loose Tube
F - 900um White Loose Tube
S - Specify

⑤: Fiber Type on Port 1 & 2
2B - PM1310 Fiber
3B - PM1550 Fiber
8 - SMF-28e Fiber
S - Specify

⑥: Fibre Length
0.8 - 0.8m
S - Specify

⑦: Package Type
01 - Ø5.5×35

# High Power In-line Polarizer 15xxnm 10W

Spec No.: CAT-05-015D Date：

**Specifications**

| Parameters | Unit | Values |
|---|---|---|
| Center Wavelength | nm | 1310, 1480 or 1550 |
| Operating Wavelength Range | nm | ±50 |
| Typ. Insertion Loss at 23°C | dB | 0.3 |
| Max. Insertion Loss at 23°C | dB | 0.5 |
| Min. Return loss | dB | 50 |
| Typ. Extinction ratio at 23°C （Input to Output） | dB | 30 |
| Min. Extinction ratio at 23°C （Input to Output） | dB | 28 |
| Min. Extinction Ratio at 23°C（Output to Input） | dB | 23(Only for PM Fiber on Input Port) |
| Min.PDL(Only for SMF on all ports)@23°C | dB | 25 |
| Max. Optical Power (CW) | W | 1, 3, 5,10 or Specify |
| Max. Peak Power for ns Pulse | kW | 10 |
| Max. Tensile Load | N | 5 |
| Fiber Type | - | PM Panda Fiber or SMF-28e |
| Operating Temperature | °C | -5 to +70 |
| Storage Temperature | °C | -40 to +85 |

*Above specifications are for devices without connectors.

*For devices with connectors, IL will be 0.3dB higher, RL will be 5dB lower and ER will be 2dB lower,can only handle 1W（CW）powe

*The PM fiber and the connector key are aligned to the slow axis.

*The material must be RoHS compliant.

**Package Dimensions**

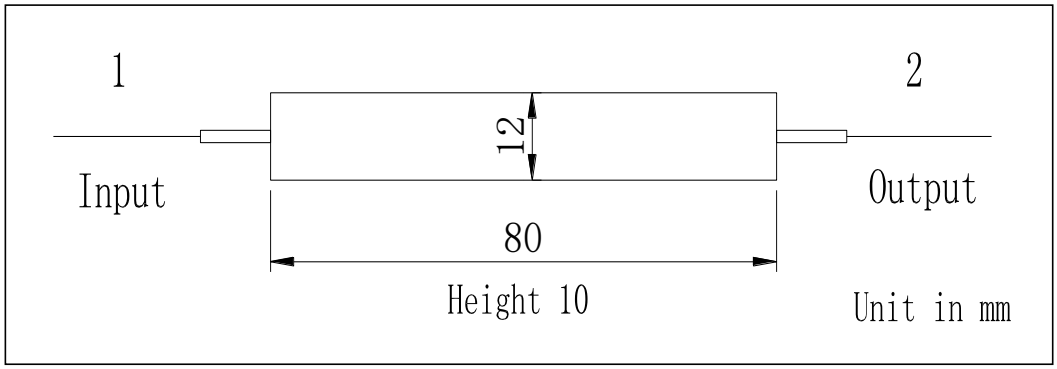


**Ordering information**

**HILP-**①①①①-②-③③-④④-⑤-⑥-⑦

①①①①: Wavelength
1550 - 1550nm
S - Specify

②: Handing Power
5 - 5W

③③: Connector Type on Port 1 & 2
1A - FC/UPC
2A - FC/APC
3D - SC/UPC
4D - SC/APC
N - None
S - Specify

④④: Fiber Jacket on Port 1 & 2
B - 250um Bare Fiber
C - 900um Red Loose Tube
F - 900um White Loose Tube
S - Specify

⑤: Fiber Type on Port 1 & 2
3A - PM1550 Fiber
8 - SMF-28e Fiber
S - Specify

⑥: Fibre Length
0.8 - 0.8m
S - Specify

⑦: Package Type
08 - 80×12×10

# In-line Polarizer 19xxnm 300mW

Spec No.: CAT-10-019C Date:

**Specifications**

| Parameters | Unit | Values | |
|---|---|---|---|
| Center Wavelength | nm | 2000 | |
| Operating Wavelength Range | nm | ±50 | |
| Typ. Insertion Loss at 23°C | dB | 0.6 | 0.8 |
| Max. Insertion Loss at 23°C | dB | 0.8 | 1.0 |
| Min. Return Loss | dB | 50 | |
| Typ. Extinction ratio at 23°C | dB | 28 | |
| Min. Extinction ratio at 23°C | dB | 25 | |
| Min.PDL(Only for SMF on all ports)@23°C | dB | 22 | |
| Max. Optical Power (CW) | mW | 500 (Based on proper polarization alignment) | |
| Max. Tensile Load | N | 5 | |
| Fiber Type | - | SMF-28e Fiber or PM 1550 Fiber | SM 1950 Fiber or PM 1950 Fiber |
| Operating Temperature | °C | -5 to +70 | |
| Storage Temperature | °C | -40 to +85 | |

*Above specifications are for devices without connectors.

*For devices with connectors, IL will be 0.3dB higher, RL will be 5dB lower and ER will be 2dB lower.

*The PM fiber and the connector key are aligned to the slow axis.

**Package Dimensions**

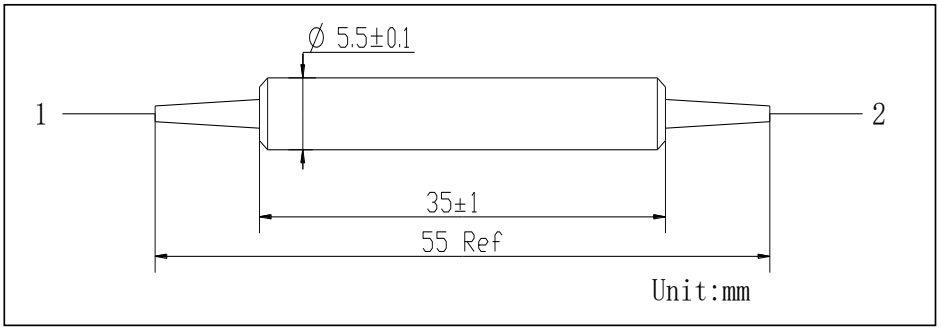


**Ordering information**

**ILP-①-②②-③③-④-⑤-⑥**

①: Wavelength
2000 - 2000nm
S - Specify

②②: Connector Type on Port 1 & 2
1A - FC/UPC
2A - FC/APC
3D - SC/UPC
4D - SC/APC
N - None
S - Specify

③③: Fiber Jacket on Port 1 & 2
B - Bare Fiber
C - 900um Red Loose Tube
F - 900um White Loose Tube
S - Specify

④④: Fiber Type on Port 1 & 2
8 - SMF-28e Fiber
3B - PM 1550 Fiber
F5 - SM 1950 Fiber
B10 - PM 1950 Fiber
S - Specify

⑤: Fibre Length
0.8 - 0.8m
S - Specify

⑥: Package Type
01 - Ø5.5×35

# High Power In-line Polarizer 19xxnm 10W

Spec Review No.: SR2305031A Date: May. 10, 2023

**Specifications**

| Parameters | Unit | Values | |
|---|---|---|---|
| Center Wavelength | nm | 2000 | |
| Operating Wavelength Range | nm | ±50 | |
| Typ. Insertion Loss at 23°C | dB | 0.6 | 0.8 |
| Max. Insertion Loss at 23°C | dB | 0.8 | 1.0 |
| Min. Return loss | dB | 50 | |
| Typ. Extinction ratio at 23°C (only for Output is PM Fiber) | dB | 28 | |
| Min. Extinction ratio at 23°C (only for Output is PM Fiber) | dB | 25 | |
| Min. PDL at 23°C (only for Input is SM Fiber) | dB | 22 | |
| Max. Optical Power (CW) | W | 1 or Specify | |
| Max. Tensile Load | N | 5 | |
| Fiber Type | - | SMF-28e Fiber or PM 1550 Fiber | SM 1950 Fiber or PM 1950 Fiber |
| Operating Temperature | °C | -5 to + 70 | |
| Storage Temperature | °C | -40 to +85 | |

*Above specifications are for devices without connectors.

*For devices with connectors, IL will be 0.3dB higher, RL will be 5dB lower and ER will be 2dB lower, optical power is only 1W.

* The material must be RoHS compliant.

**Package Dimensions**

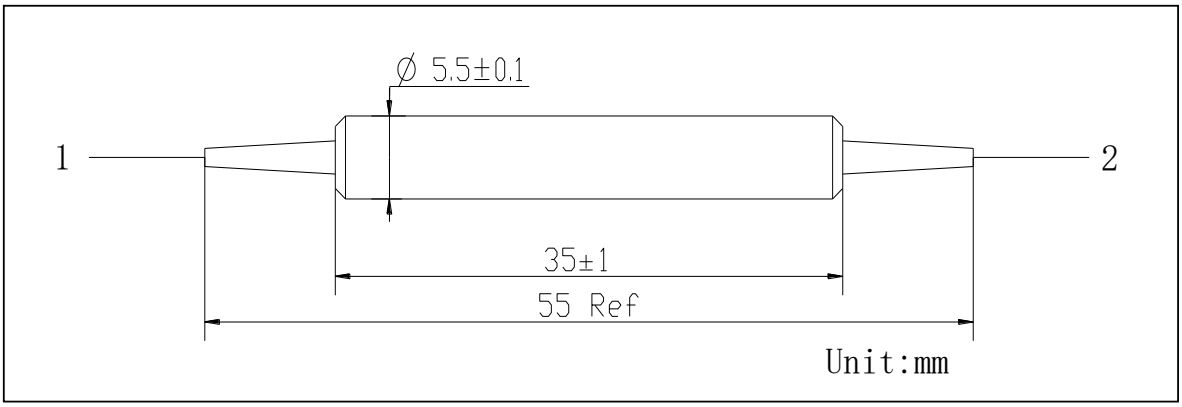


**Ordering information**

**HILP-①①①①-②②-③③-④④-⑤-⑥-⑦**

①①①①: Wavelength
2000 - 2000nm
S - Specify

②:Handling Power
01 - 1W
S - Specify

③③: Connector Type on Port 1 & 2
1B - FC/UPC
2B - FC/APC (Step)
3B - SC/UPC
4B - SC/APC (Step)
N - None
S - Specify

④④: Fiber Jacket on Port 1 & 2
B - Bare Fiber
C - 900um Red Loose Tube
F - 900um White Loose Tube
S - Specify

⑤: Fiber Type on Port 1 & 2
8 - SMF-28e Fiber
3B - PM 1550 Fiber
F5 - SM 1950 Fiber
B10 - PM 1950 Fiber
S - Specify

⑥: Fibre Length
1 - 1m
S - Specify

⑦: Package Type
01 - Ø5.5×35

# Isolator Polarization Beam Combiner/Splitter 10xxnm 300mW

Spec No.: CAT-09-004C Date

**Specifications**

| Parameter | Unit | Values |
|---|---|---|
| Stage | | Single stage |
| Center Wavelength | nm | 1064 |
| Operating Wavelength Range | nm | ± 5 |
| Min. Isolation at 23°C | dB | 25 |
| Typ. Isolation | dB | 35 |
| Typ. Insertion Loss | dB | 1.8 |
| Max. Insertion Loss | dB | 2.1 |
| Min. Return Loss | dB | 50 |
| Min. Directivity | dB | 50 |
| Min. Extinction Ratio (for Splitter only) | dB | 20 |
| Max. Optical Power (CW) | mW | 300 |
| Max. Tensile Load | N | 5 |
| Operating Temperature | ℃ | -5 to + 50 |
| Storage Temperature | ℃ | -40 to +85 |

* Above specifications are for device without connector.
* For devices with connectors, IL will be 0.5dB higher, RL will be 5dB lower, and ER will be 2dB lower.
* The PM fiber and the connector key are aligned to the slow axis.
* The material must be RoHS compliant.

**Package Dimensions**

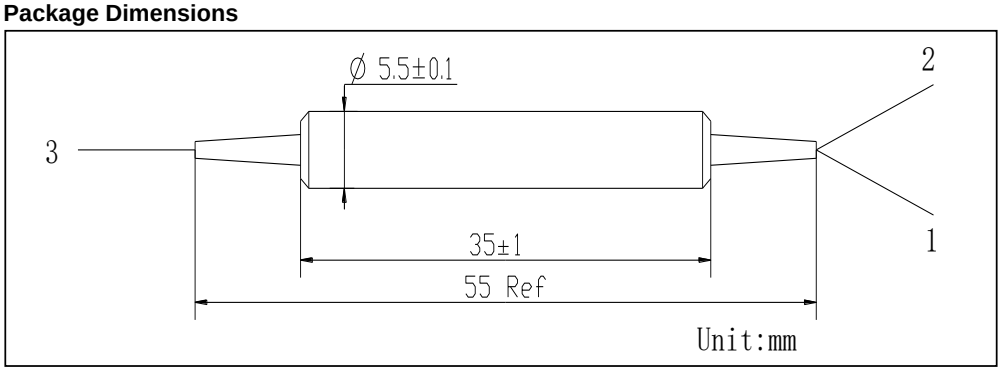


**Ordering Information**

**IPBC**-①-②-③③③-④④④-⑤⑤-⑥-⑦-⑧

**IPBS**-①-②-③③③-④④④-⑤⑤-⑥-⑦-⑧

①: Wavelength
1064 - 1064nm

②: Stage
S - Single Stage

③③③: Connector Type on Port 1, 2 & 3
1B - FC/UPC
2B - FC/APC (Step)
3D - SC/UPC
4D - SC/APC (Step)
N - None
S - Specify

④④④: Fiber Jacket on Port 1, 2 & 3
B - Bare Fiber
C - 900um Red Loose Tube (PM Fiber)
F - 900um White Loose Tube (SM Fiber)
SS - Specify

⑤⑤: Fiber Type
03B - Port 1, 2&3: PM980
11B - Port 1&2: PM980, Port 3: HI1060
18 - Port 1, 2&3: HI1060
S - Specify

⑥: Axis Alignment on Port 3
1 - SM Fiber, Align to Port 1 &2 Slow Axis
2 - PM Fiber, Slow Axis Align 45°to Port 1
3 - PM Fiber, Slow Axis Align to Port 1
4 - All Ports are SM Fiber
S - Specify

⑦: Fiber Length
0.8 - 0.8m
S - Specify

⑧: Package Dimensions
01 - Ø5.5×35
S - Specify

# High Power Polarization Maintaining Tap Isolator Hybrid 10xxnm 300mW

Spec Review No.: SR2405019B Date: May. 14, 2024

## Specifications

| Parameters | Unit | Values |
|---|---|---|
| Center Wavelength (λc) | nm | 1030 or Specify |
| Operating Wavelength Range | nm | ±10 |
| Typ. Excess Loss at λc,23℃ | dB | 0.7 |
| Max. Excess Loss at λc,23℃ | dB | 1.0 |
| Typ. Peak Isolation at λc,23℃ | dB | 28~33 |
| Min. Isolation at λc,23℃ | dB | 26 |
| Tap Ratio at λc,23℃ | % | 0.3±0.1 ,01±0.5 or Specify |
| Min. ER at 23℃（Output） | dB | 20 |
| Min. Return Loss（Input/Output） | dB | 50 |
| Max. Average Power @ Proper SOP | W | 5 or Specify |
| Max. Peak Power for ns Pulse | kW | 10 |
| Max. Tensile Load | N | 5 |
| Operating Temperature | ℃ | 0 to +50 |
| Storage Temperature | ℃ | -20 to+75 |

*Above parameter only for inner core.

* Above specifications are for device without connector.

* For devices with connectors, IL will be 0.5dB higher, RL will be 5dB lower,ER will be 2dB lower & handling power will be only 1W(CW)

* The PM fiber and connector key are aligned to the slow axis.

* The material must be RoHS compliant.

## Package Dimensions

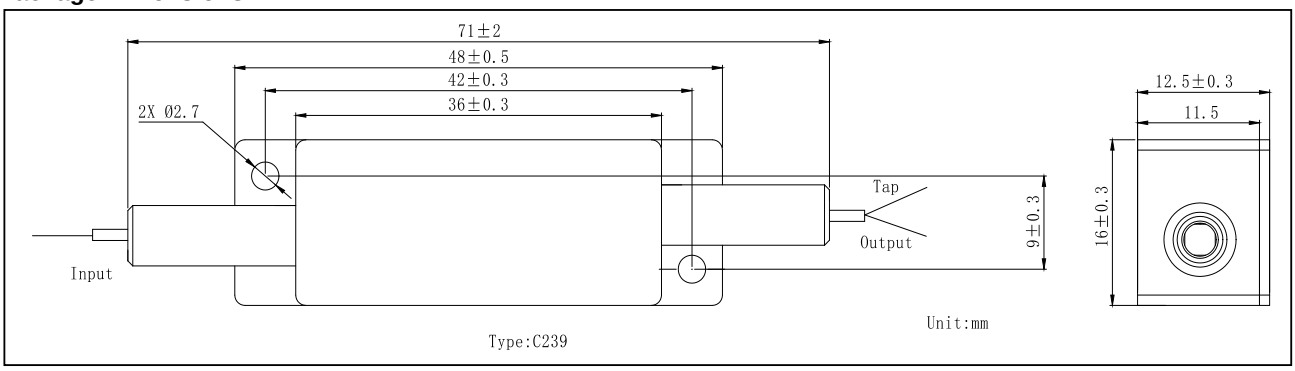


## Ordering Information

**HPMTAPI**-①①-②-③③-④④-⑤-⑥-⑦-⑧-⑨

①①: Wavelength
03 - 1030nm
S - Specify

②: Package Type
C239 - Type C239

③③: Tap Ratio
0.3 - 0.3%
01 - 1%
S - Specify

④④: Handling Power
05 - 5W
S - Specify

⑤: Axis Alignment
F - Fast Axis Blocked

⑥: Connector Type
N - None
S - Specify

⑦: Fiber Jacket
B - Bare Fiber
C - 900um Loose Tube

⑧: Fiber Length
0.6 - 0.6m
S - Specify

⑨: Fiber Type
1 - PM980 Fiber
45 - PLMA-GDF 10/125-M NA0.075 Fiber
65 - Nufern PM1060L 10/125 GSF NA0.085 Fiber
S - Specify

# High Power Polarization Maintaining Tap Isolator Hybrid 10xxnm 10W

Spec Review No.: SR2311086A Date: Nov. 23, 2023

## Specifications

| Parameters | Unit | Values |
|---|---|---|
| Center Wavelength (λc) | nm | 1070 or Specify |
| Operating Wavelength Range | nm | ±20 |
| Typ. Insertion Loss(λc),23℃, Port 2 to Port 1 | dB | 0.6 |
| Max. Insertion Loss(λc),23℃, Port 2 to Port 1 | dB | 1.0 |
| Min. Isolation(λc)23℃, Port 1 to Port 2 | | 30 |
| Min. Isolation(λ±10nm)23℃, Port 1 to Port 2 | dB | 26 |
| Min. Isolation(λ±20nm)23℃, Port 1 to Port 2 | dB | 22 |
| Tap Ratio(λc) ,Port 2 to Port 3 | % | 0.3±0.1 or Specify |
| Min. ER(only for Port 2 to Port 1) | dB | 20 |
| Min. Return Loss (only for Port 1 & 2) | dB | 50 |
| Max. Average Power @ Proper SOP | W | 30 or Specify |
| Max. Peak Power for ns Pulse | kW | 10 |
| Max. Tensile Load | N | 5 |
| Operating Temperature | ℃ | 0 to +50 |
| Storage Temperature | ℃ | -20 to+75 |

*Above parameter only for inner core.

* Above specifications are for device without connector.

* For devices with connectors, IL will be 0.5dB higher, RL will be 5dB lower,ER will be 2dB lower & handling power will be only 1W(CW)

* The PM fiber and connector key are aligned to the slow axis.

* The material must be RoHS compliant.

## Package Dimensions

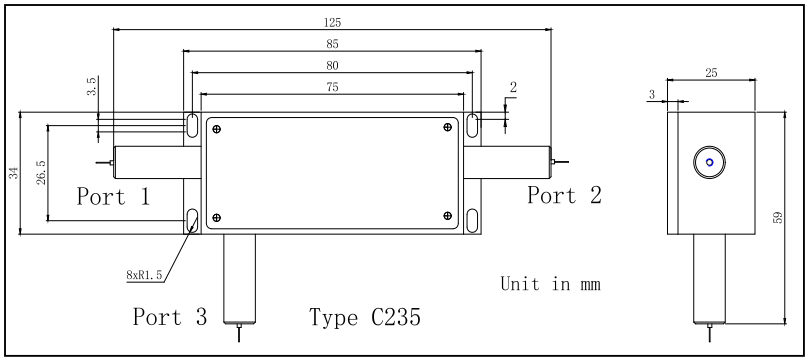


## Ordering Information

**HPMTAPI**-①①-②-③③-④④-⑤-⑥⑥⑥-⑦⑦⑦-⑧-⑨⑨⑨

①①: Wavelength
07 - 1070nm
S - Specify

②: Package Type
C235 - Type C235

③③: Tap Ratio
0.3 - 0.3%
S - Specify

④④: Handling Power
30 - 30W
S - Specify

⑤: Axis Alignment
F - Fast Axis Blocked

⑥⑥⑥: Connector Type on Port 1/2/3
1A - FC/UPC
2A - FC/APC(Step)
N - None
S - Specify

⑦⑦⑦: Fiber Jacket on Port 1/2/3
B - Baer Fiber
S - Specify

⑧: Fiber Length on Port 1/2/3
0.6 - 0.6m
S - Specify

⑨⑨⑨:Fiber Type on Port 1/2/3
S1 - Hi1060 Fiber
45 - Nufern PLMA-GDF-10/125-M NA0.075 Fiber
63 - Nufern FUD-3270 PM12.5/125 NA0.06 Fiber
S - Specify

# Isolator Polarization Beam Combiner/Splitter 15xxnm 300mW

Spec No.: CAT-09-005C Date

**Specifications**

| Parameter | Unit | Values | |
|---|---|---|---|
| Stage | | Single stage | Dual stage |
| Center Wavelength | nm | 1310, 1480 or 1550 | |
| Operating Wavelength Range | nm | ±40 | |
| Typ. Insertion loss | dB | 0.45 | 0.55 |
| Max. Insertion loss | dB | 0.7 | 0.8 |
| Typ. Isolation | dB | 38 | 52 |
| Min. Isolation @23℃ | dB | 20 | 42 |
| Min. Extinction Ratio (for Splitter only) | dB | 20 | 20 |
| Min. Return Loss | dB | 50 | |
| Min. Directivity | dB | 50 | |
| Max. Optical Power (CW) | mW | 500 | |
| Max. Tensile Load | N | 5 | |
| Fiber Type | | PM Panda Fiber on Port 1 and 2, SMF-28e Fiber or PM Panda Fiber on Port 3 | |
| Operating Temperature | ℃ | -5 to +70 | |
| Storage Temperature | ℃ | -40 to +85 | |

*Above specifications are for device without connector.

*For devices with connectors, IL will be 0.3dB higher, RL will be 5dB lower and ER will be 2dB lower.

*The PM fiber and the connector key are aligned to the slow axis.

* The material must be RoHS compliant.

**Package Dimensions**

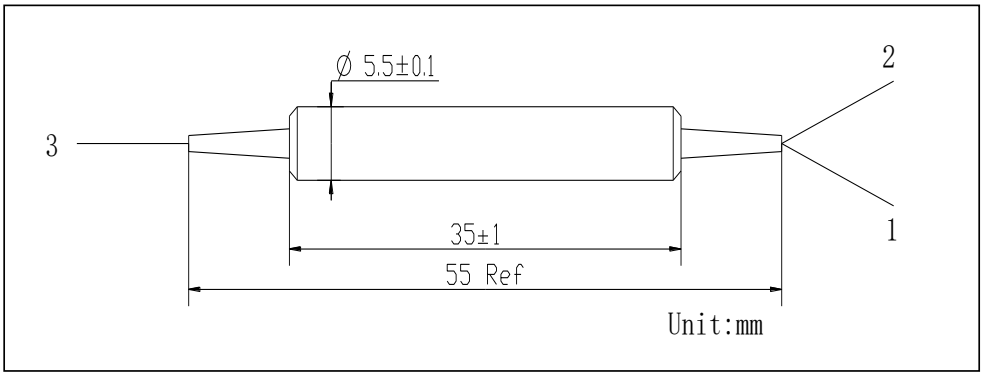


**Ordering Information**

**IPBC**-①-②-③③③-④④④-⑤⑤-⑥-⑦-⑧

**IPBS**-①-②-③③③-④④④-⑤⑤-⑥-⑦-⑧

①: Wavelength
- 1310 - 1310nm
- 1480 - 1480nm
- 1550 - 1550nm
- S - Specify

②: Stage
- S - Single Stage
- D - Dual Stage

③③③: Connector Type on Port 1, 2 & 3
- 1B - FC/UPC
- 2B - FC/APC (Step)
- 3D - SC/UPC
- 4D - SC/APC (Step)
- N - None
- S - Specify

④④④: Fiber Jacket on Port 1, 2 & 3
- B - Bare Fiber
- C - 900um Red Loose Tube (PM Fiber)
- F - 900um White Loose Tube (SM Fiber)
- SS - Specify

⑤⑤: Fiber Type
- 05B - Port 1, 2&3: PM1300
- 06B - Port 1, 2&3: PM14XX
- 07B - Port 1, 2&3: PM1550
- 13B - Port 1&2: PM1300, Port 3: SMF-28e
- 14B - Port 1&2: PM14XX, Port 3: SMF-28e
- 15B - Port 1&2: PM1550, Port 3: SMF-28e
- 19 - Port 1, 2&3: SMF-28e
- S - Specify

⑥: Axis Alignment on Port 3
- 1 - SM Fiber, Align to Port 1 &2 Slow Axis
- 2 - PM Fiber, Slow Axis Align 45°to Port 1
- 3 - PM Fiber, Slow Axis Align to Port 1
- 4 - All Ports are SM Fiber
- S - Specify

⑦: Fiber Length
- 0.8 - 0.8m
- S - Specify

⑧: Package Dimensions
- 01 - Ø5.5×35
- S - Specify

# High Power Isolator Polarization Beam Combiner/Splitter 15xxnm 10W

**Spec No.: CAT-05-051C** **Date:**

**Specifications**

| Parameter | Unit | Values | |
|---|---|---|---|
| Stage | - | Single stage | Dual stage |
| Center Wavelength | nm | 1310, 1480 or 1550 | |
| Operating Wavelength Range | nm | ±40 | |
| Typ. Insertion loss | dB | 0.65 | 0.75 |
| Max. Insertion loss | dB | 0.9 | 1.0 |
| Typ. Isolation | dB | 38 | 52 |
| Min. Isolation @23℃ | dB | 20 | 42 |
| Min. Extinction Ratio (for Splitter only) | dB | 20 | 20 |
| Min. Return Loss | dB | 50 | |
| Min. Directivity | dB | 50 | |
| Max. Optical Power (CW) | W | 1, 3, 5 or Specify | |
| Max. Peak Power for ns Pulse | kW | 10 | |
| Max. Tensile Load | N | 5 | |
| Operating Temperature | ℃ | -5 to +70 | |
| Storage Temperature | ℃ | -40 to +85 | |

* Above specifications are for device without connector.
* For devices with connectors,IL will be 0.3dB higher,RL will be 5dB lower and ER will be 2dB lower and optical power is only 1W(CW).
* The PM fiber and the connector key are aligned to the slow axis.
* The material must be RoHS compliant.

**Package Dimensions**

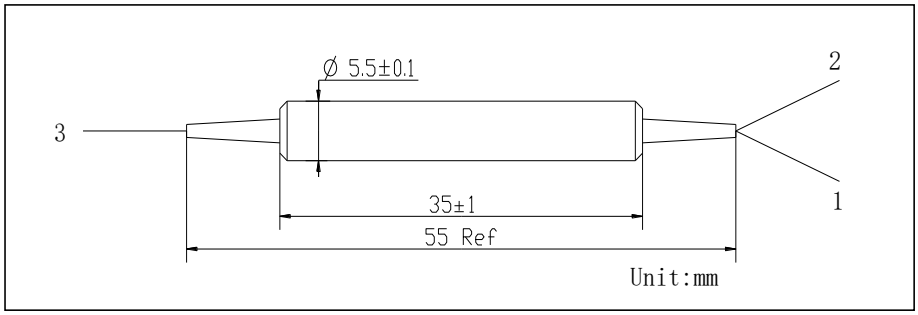


**Ordering Information**

**HIPBC**-①①-②-③③-④④④-⑤⑤⑤-⑥-⑦
**HIPBS**-①①-②-③③-④④④-⑤⑤⑤-⑥-⑦

①: Wavelength
1310 - 1310nm
1480 - 1480nm
1550 - 1550nm
S - Specify

②: Stage
S - Single Stage
D - Dual Stage

③③;Handling Power
01 - 1W
SS - Specify

④④④: Connector Type on Port 1, 2 & 3
1B - FC/UPC
2B - FC/APC (Step)
3D - SC/UPC
4D - SC/APC (Step)
N - None
S - Specify

⑤⑤⑤: Fiber Jacket on Port 1, 2 & 3
B - Bare Fiber
C - 900um Red Loose Tube (PM Fiber)
F - 900um White Loose Tube (SM Fiber)
SS - Specify

⑥⑥: Fiber Type
05B - Port 1, 2&3: PM1300
06B - Port 1, 2&3: PM14XX
07B - Port 1, 2&3: PM1550
13B - Port 1&2: PM1300, Port 3: SMF-28e
14B - Port 1&2: PM14XX, Port 3: SMF-28e
15B - Port 1&2: PM1550, Port 3: SMF-28e
19 - Port 1, 2&3: SMF-28e
S - Specify

⑦: Axis Alignment on Port 3
1 - SM Fiber, Align to Port 1 &2 Slow Axis
2 - PM Fiber, Slow Axis Align 45°to Port 1
3 - PM Fiber, Slow Axis Align to Port 1
4 - All Ports are SM Fiber
S - Specify

⑧: Fiber Length
0.8 - 0.8m
S - Specify

⑨: Package Dimensions
01 - Ø5.5×35
S - Specify

# Polarization Maintaining Tap Isolator 10xxnm 300mW

**Spec No.: CAT-11-008B** **Date:**

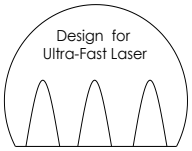


**Specifications** Instruments

| Parameters | Unit | Values | |
|---|---|---|---|
| Stage | - | Single Stage | Dual Stage |
| Center Wavelength | - | 1064 | |
| Operating Wavelength Range | nm | ±5 | |
| Max. Excess Loss | dB | 2.0 | 3.4 |
| Tap Ratio (Input to Tap) | % | 1+/-0.2, 10+/-2.0 or Specify | |
| Uniformity (only for 50/50) | dB | 0.5 | 0.7 |
| Typ. Peak Isolation (Output to Input) | dB | 35 | 58 |
| Min. Isolation at 23℃ | dB | 28 | 48 |
| Min. Extinction Ratio (only for B Type) | dB | 20 | 20 |
| Min. Extinction Ratio (only for F Type) | dB | 23 | 23 |
| Min. Return Loss (for all ports) | dB | 50 | 50 |
| Max. Optical Average Power (Proper SOP) | mW | 300 | |
| Max. Peak Power for ps Pulse (Proper SOP) | kW | 0.5, 1 or Specify | |
| Max. Tensile Load | N | 5 | |
| Operating Temperature | ℃ | -5 to +50 | |
| Storage Temperature | ℃ | -40 to +85 | |

*Above specifications are for device without connector.
*For devices with connectors, IL will be 0.5dB higher, RL will be 5dB lower, ER will be 2dB lower.
*The PM fiber and the connector key are aligned to the slow axis.
*The material must be RoHS compliant.

**Package Dimensions**

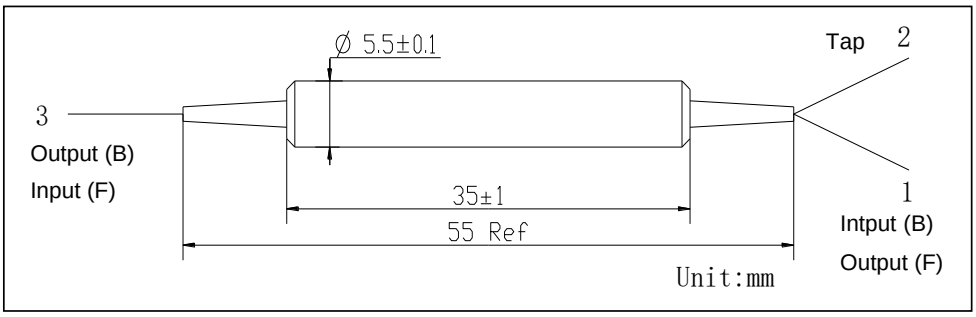


**Ordering Information**

**PMTAPI-UF**-①-②-③③-④④-⑤-⑥⑥⑥-⑦⑦⑦-⑧-⑨-⑩

①: Wavelength
1064 - 1064nm

②: Stage Type
S - Single Stage
D - Dual Stage

③③: Tap Ratio
01 - 1%
10 - 10%
SS - Specify

④④: Average /Peak Power
0.3/1 - 0.3W /1kW
SS - Specify

⑤: Axis Alignment
F - Fast Axis Blocked
B - Both Axis Working

⑥⑥⑥: Connector Type on Port 1, 2 &3
1B - FC/UPC
2B - FC/APC (Step)
3D - SC/UPC
4D - SC/APC (Step)
N - None
S - Specify

⑦⑦⑦: Fiber Jacket on Port 1, 2 &3
B - Bare Fiber
C - 900um Red Loose Tube (PM Fiber)
F - 900um White Loose Tube (SM Fiber)
SS - Specify

⑧: Fiber Type
03B - Port 1, 2&3: PM980
11B - Port 1&3: PM980, Port 2: HI1060
S - Specify

⑨: Fiber Length
0.8 - 0.8 m
S - Specify

⑩: Package Dimensions
01 - Ø5.5×35

# High Power Polarization Maintaining Tap Isolator Hybrid 10xxnm 300mW

Spec Review No.: SR2405019B Date: May. 14, 2024

## Specifications

| Parameters | Unit | Values |
|---|---|---|
| Center Wavelength (λc) | nm | 1030 or Specify |
| Operating Wavelength Range | nm | ±10 |
| Typ. Excess Loss at λc,23℃ | dB | 0.7 |
| Max. Excess Loss at λc,23℃ | dB | 1.0 |
| Typ. Peak Isolation at λc,23℃ | dB | 28~33 |
| Min. Isolation at λc,23℃ | dB | 26 |
| Tap Ratio at λc,23℃ | % | 0.3±0.1 ,01±0.5 or Specify |
| Min. ER at 23℃（Output） | dB | 20 |
| Min. Return Loss（Input/Output） | dB | 50 |
| Max. Average Power @ Proper SOP | W | 5 or Specify |
| Max. Peak Power for ns Pulse | kW | 10 |
| Max. Tensile Load | N | 5 |
| Operating Temperature | ℃ | 0 to +50 |
| Storage Temperature | ℃ | -20 to+75 |

*Above parameter only for inner core.

* Above specifications are for device without connector.

* For devices with connectors, IL will be 0.5dB higher, RL will be 5dB lower,ER will be 2dB lower & handling power will be only 1W(CW)

* The PM fiber and connector key are aligned to the slow axis.

* The material must be RoHS compliant.

## Package Dimensions

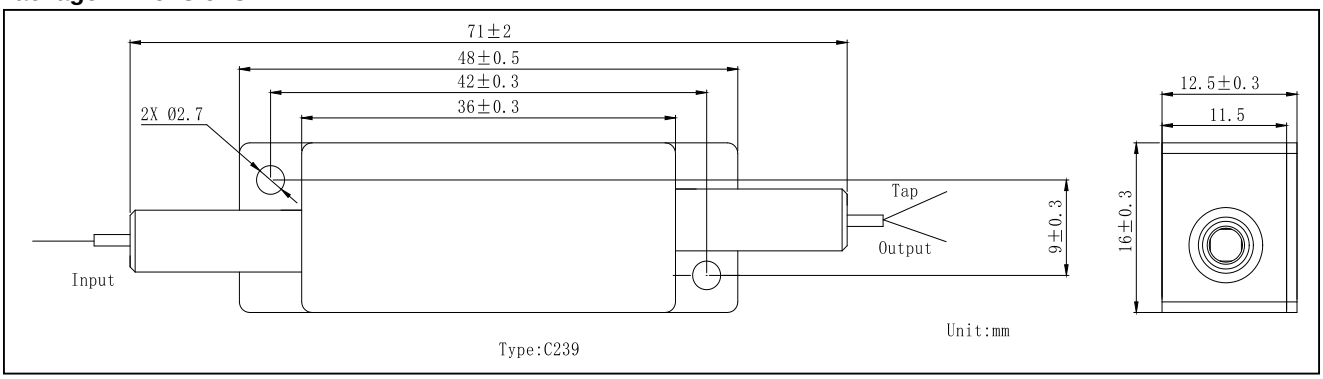


## Ordering Information

**HPMTAPI**-①①-②-③③-④④-⑤-⑥-⑦-⑧-⑨

①①: Wavelength
03 - 1030nm
S - Specify

②: Package Type
C239 - Type C239

③③: Tap Ratio
0.3 - 0.3%
01 - 1%
S - Specify

④④: Handling Power
05 - 5W
S - Specify

⑤: Axis Alignment
F - Fast Axis Blocked

⑥: Connector Type
N - None
S - Specify

⑦: Fiber Jacket
B - Bare Fiber
C - 900um Loose Tube

⑧: Fiber Length
0.6 - 0.6m
S - Specify

⑨: Fiber Type
1 - PM980 Fiber
45 - PLMA-GDF 10/125-M NA0.075 Fiber
65 - Nufern PM1060L 10/125 GSF NA0.085 Fiber
S - Specify

# High Power Polarization Maintaining Tap Isolator Hybrid 10xxnm 10W

Spec Review No.: SR2311086A Date: Nov. 23, 2023

## Specifications

| Parameters | Unit | Values |
|---|---|---|
| Center Wavelength (λc) | nm | 1070 or Specify |
| Operating Wavelength Range | nm | ±20 |
| Typ. Insertion Loss(λc),23℃, Port 2 to Port 1 | dB | 0.6 |
| Max. Insertion Loss(λc),23℃, Port 2 to Port 1 | dB | 1.0 |
| Min. Isolation(λc)23℃, Port 1 to Port 2 | | 30 |
| Min. Isolation(λ±10nm)23℃, Port 1 to Port 2 | dB | 26 |
| Min. Isolation(λ±20nm)23℃, Port 1 to Port 2 | dB | 22 |
| Tap Ratio(λc) ,Port 2 to Port 3 | % | 0.3±0.1 or Specify |
| Min. ER(only for Port 2 to Port 1) | dB | 20 |
| Min. Return Loss (only for Port 1 & 2) | dB | 50 |
| Max. Average Power @ Proper SOP | W | 30 or Specify |
| Max. Peak Power for ns Pulse | kW | 10 |
| Max. Tensile Load | N | 5 |
| Operating Temperature | ℃ | 0 to +50 |
| Storage Temperature | ℃ | -20 to+75 |

*Above parameter only for inner core.

* Above specifications are for device without connector.

* For devices with connectors, IL will be 0.5dB higher, RL will be 5dB lower,ER will be 2dB lower & handling power will be only 1W(CW)

* The PM fiber and connector key are aligned to the slow axis.

* The material must be RoHS compliant.

## Package Dimensions

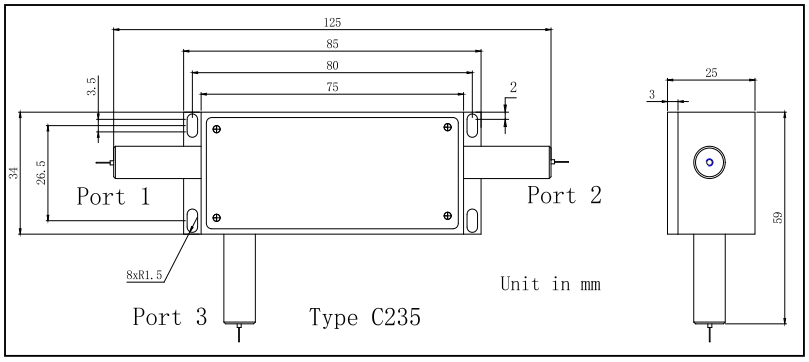


## Ordering Information

**HPMTAPI**-①①-②-③③-④④-⑤-⑥⑥⑥-⑦⑦⑦-⑧-⑨⑨⑨

①①: Wavelength
07 - 1070nm
S - Specify

②: Package Type
C235 - Type C235

③③: Tap Ratio
0.3 - 0.3%
S - Specify

④④: Handling Power
30 - 30W
S - Specify

⑤: Axis Alignment
F - Fast Axis Blocked

⑥⑥⑥: Connector Type on Port 1/2/3
1A - FC/UPC
2A - FC/APC(Step)
N - None
S - Specify

⑦⑦⑦: Fiber Jacket on Port 1/2/3
B - Baer Fiber
S - Specify

⑧: Fiber Length on Port 1/2/3
0.6 - 0.6m
S - Specify

⑨⑨⑨:Fiber Type on Port 1/2/3
S1 - Hi1060 Fiber
45 - Nufern PLMA-GDF-10/125-M NA0.075 Fiber
63 - Nufern FUD-3270 PM12.5/125 NA0.06 Fiber
S - Specify

# Polarization Maintaining Tap Isolator 15xxnm 300mW

Spec No.: CAT-09-030C Date

**Specifications**

| Parameters | Unit | Values | |
|---|---|---|---|
| Stage | | Single Stage | Dual Stage |
| Center Wavelength | | 1310, 1480, 1550, 1590 | |
| Operating Wavelength Range | nm | +/-20 | |
| Max. Excess Loss | dB | 0.8 | 0.9 |
| Tap Ratio (Input to Tap) | % | 1+/-0.2, 5+/-1.0, 10+/-2.0 or Specify | |
| Typ. Peak Isolation (Output to Input) | dB | 40 | 58 |
| Min. Isolation at 23℃ | dB | 28 | 48 |
| Min. Extinction Ratio (only for B Type) | dB | 20 | 20 |
| Min. Extinction Ratio (only for F Type) | dB | 23 | 23 |
| Min. Return Loss (for all ports) | dB | 50 | 50 |
| Max. Optical Power (CW) | mW | 500 | |
| Max. Tensile Load | N | 5 | |
| Fiber Type | | PM 1550 Panda Fiber for Input and Output Ports, SMF-28e Fiber or Panda Fiber for Tap Port | |
| Operating Temperature | ℃ | 0 to +70 | |
| Storage Temperature | ℃ | -40 to +85 | |

*Above specifications are for device without connector.

*For devices with connectors, IL will be 0.3dB higher, RL will be 5dB lower, ER will be 2dB lower.

*The PM fiber and the connector key are aligned to the slow axis and fast axis is blocked.

*The material must be RoHS compliant.

**Package Dimensions**

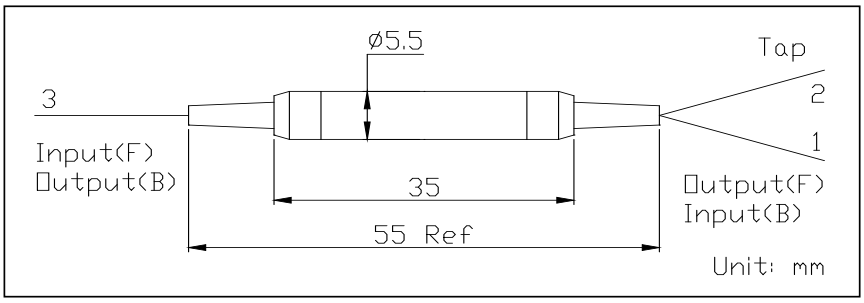


**Ordering Information**

**PMTAPI**-①-②-③③-④-⑤⑤⑤-⑥⑥⑥-⑦-⑧-⑨⑨

①①: Wavelength
1310 - 1310nm
1480 - 1480nm
1550 - 1550nm
1590 - 1590nm
S - Specify

②: Stage
S - Single Stage
D - Dual Stage

③③: Tap Ratio
01 - 1%
05 - 5%
10 - 10%
SS - Specify

④: Axis Alignment
F - Fast Axis Blocked
B - Both Axis Working

⑤⑤⑤: Connector Type on Port 1, 2 & 3
1B - FC/UPC
2B - FC/APC (Step)
3D - SC/UPC
4D - SC/APC (Step)
N - None
S - Specify

⑥⑥⑥: Fiber Jacket on Port 1, 2 & 3
B - Bare Fiber
C - 900um Red Loose Tube
F - 900um White Loose Tube
S - Specify

⑦: Fiber Type
05B - Port 1, 2&3: PM1300
07B - Port 1, 2&3: PM1550
13B - Port 1&3: PM1300, Port 2: SMF-28e
15B - Port 1&3: PM1550, Port 2: SMF-28e
19 - Port 1, 2&3: SMF-28e
S - Specify

⑧: Fiber Length
0.8 - 0.8m
S - Specify

⑨⑨: Package Type
01 - Ø5.5×35
10 - Ø5.5×35(Without Rub)

# High Power Polarization Maintaining Tap Isolator 15xxnm 10W

Spec No.: CAT-05-054C Date:

**Specifications**

| Parameters | Unit | Values | |
|---|---|---|---|
| Stage | - | Single Stage | Dual Stage |
| Center Wavelength | - | 1310, 1480, 1550, 1590 or Specify | |
| Operating Wavelength Range | nm | +/-20 | |
| Max. Excess Loss | dB | 1.0 | 1.1 |
| Tap Ratio (Input to Tap) | % | 1+/-0.2, 5+/-1.0, 10+/-2.0 or Specify | |
| Typ. Peak Isolation (Output to Input) | dB | 40 | 58 |
| Min. Isolation at 23℃ | dB | 28 | 48 |
| Min. Extinction Ratio (only for B Type) | dB | 20 | |
| Min. Extinction Ratio (only for F Type) | dB | 23 | |
| Min. Return Loss (for all ports) | dB | 50 | |
| Max. Optical Power (CW) | W | 1, 3, 5 or Specify | |
| Max. Peak Power for ns Pulse | kW | 10 | |
| Max. Tensile Load | N | 5 | |
| Fiber Type | - | PM 1550 Panda Fiber for Input and Output Ports, SMF-28e Fiber or Panda Fiber for Tap Port | |
| Operating Temperature | ℃ | -5 to +70 | |
| Storage Temperature | ℃ | -40 to +85 | |

*Above specifications are for device without connector.

*For devices with connectors, IL will be 0.3dB higher, RL will be 5dB lower, ER will be 2dB lower and optical power is only 1000mW(CW).

*The PM fiber and the connector key are aligned to the slow axis and fast axis is blocked.

*The material must be RoHS compliant.

**Package Dimensions**

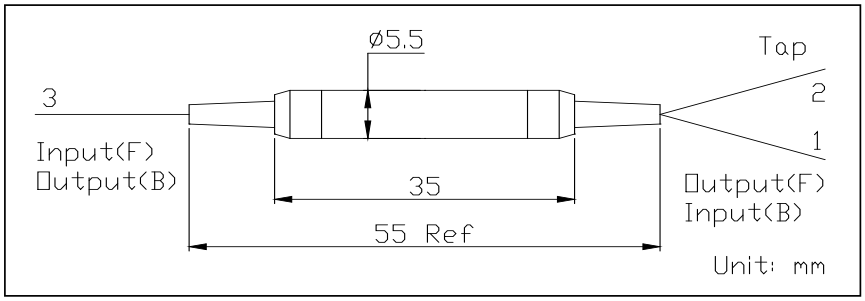


**Ordering Information**

**HPMTAPI**-①-②-③③-④④-⑤-⑥⑥⑥-⑦⑦⑦-⑧⑧-⑨-⑩⑩

①: Wavelength
1310 - 1310nm
1480 - 1480nm
1550 - 1550nm
1590 - 1590nm
S - Specify

②: Stage
S - Single Stage
D - Dual Stage

③③: Tap Ratio
01 - 1%
05 - 5%
10 - 10%
SS - Specify

④④;Handling Power
01 - 1W
SS - Specify

⑤: Axis Alignment
F - Fast Axis Blocked
B - Both Axis Working

⑥⑥⑥: Connector Type on Port 1, 2 & 3
1B - FC/UPC
2B - FC/APC (Step)
3D - SC/UPC
4D - SC/APC (Step)
N - None
S - Specify

⑦⑦⑦: Fiber Jacket on Port 1, 2 & 3
B - Bare Fiber
C - 900um Red Loose Tube
F - 900um White Loose Tube
S - Specify

⑧⑧: Fiber Type
07B - Port 1, 2&3: PM1550
15B - Port 1&3: PM1550, Port 2: SMF-28e
S - Specify

⑨: Fiber Length
0.8 - 0.8 m
S - Specify

⑩⑩: Package Type
01 - Ø5.5×35

# Polarization Maintaining Isolator WDM Hybrid 10xxnm 300mW

Spec Review No.: SR1008020B Date: May. 6, 2024

**Specifications**

| Parameters | Unit | Values |
|---|---|---|
| Isolator Stage | - | Single Stage |
| Signal Band Wavelength Range | nm | 1064+/-5 |
| Reflection Band Wavelength Range | nm | 970~985 |
| Typ. Signal IL, 23℃ (only at Slow Axis) | dB | 1.7(@1064nm) |
| Max. Signal IL, 23℃ (only at Slow Axis) | dB | 2.2(@1064nm) |
| Typ. IL over Reflection Band | dB | 0.4 |
| Max. IL over Reflection Band | dB | 0.6 |
| Min. Signal Isolation, port 1 to port 3 (Forward Pump) or port 3 to port 1 (Backward Pump), 23℃ | dB | 35(@1064nm) |
| Min. Isolation, port 1 to port 2, Signal Wavelength | dB | 13 |
| Min. Isolation, Signal Channel, Reflection Wavelength | dB | 30 |
| Min. Return Loss | dB | 50 |
| Min. Extinction Ratio (only for Signal Channel) | dB | 23 |
| Min. PDL (only for Signal Channel) | dB | 23 |
| Max. PDL (only for Reflection Channel) | dB | 0.1 |
| Max. Optical Power (CW) | mW | 500 for Reflection Channel, 300 for Signal Channel |
| Max. Tensile Load | N | 5 |
| Fiber Type | - | PM Panda Fiber for Signal and Common Port |
| | | HI 1060 Fiber for Reflection Port |
| Operating Temperature | ℃ | -5 to +50 |
| Storage Temperature | ℃ | -40 to +85 |

* Above specifications are for devices without the connectors.

* For devices with connectors, IL will be 0.3dB higher, RL will be 5dB lower, and ER will be 2dB lower.

*The PM fiber and the connector key are aligned to the slow axis. And for signal channel, fast axis is blocked.

*The material must be RoHS compliant.

**Package Dimensions**

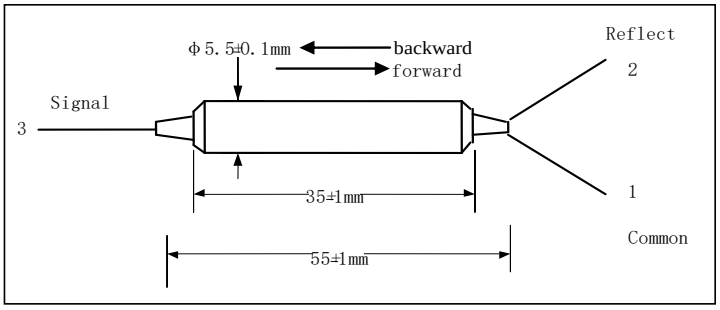


**Ordering Information**

**PMIWDM**-①①①①-②-③-④-⑤⑤-⑥⑥⑥-⑦⑦⑦-⑧-⑨⑨-⑩⑩

①①①①: Wavelength

0697 - 1064nm Pass/ 974nm Reflect

SSSS - Specify

②: Pump Type

F - Forword Pump

B - Backword Pump

③: Stage

S - Single Stage

④: Axis Alignment

F - Fast Axis Blocked

⑤⑤: Handling Power

0.5 - 500mW

S - Specify

⑥⑥⑥: Connector Type on Port 1, 2 & 3

1A - FC/UPC

2A - FC/APC

N - None

S - Specify

⑦⑦⑦: Fiber Jacket on Port 1, 2 & 3

B - 250um Bare Fiber

C - 900um Loose Tube(Red)

D - 900um Loose Tube(Blue)

S - Specify

⑧: Fiber Length

0.8 - 0.8m

S - Specify

⑨⑨: Fiber Type

03A - PM980 for 1/3,

Hi 1060 for 2

⑩⑩: Package

01 - Ø5.5x35mm

# High Power Polarization Maintaining Isolator and WDM Hybrid 10xxnm 10W

Spec Review No.: SR2311069A Date:Nov 21, 2023

## Specifications

| Parameters | | Unit | Values |
|---|---|---|---|
| Pass Band | Signal Centre Wavelength（λc） | nm | 1064±5 |
| | Max. Insertion Loss,23℃ | dB | 0.8 |
| | Min. Signal Isolation,23℃（λc） | dB | 28 |
| | Min. Extinction Ratio (only for F-Type) | dB | 20 |
| Reflect Band | Wavelength Range | nm | 960~990 |
| | Max. Insertion Loss | dB | 0.8 |
| Min. Return Loss | | dB | 50 |
| Max. Optical Power (Pass Band) | | W | 10 |
| Max. Optical Power (Reflect Band) | | W | 10 |
| Max. Tensile Load | | N | 5 |
| Operating Temperature | | ℃ | -5 to +50 |
| Storage Temperature | | ℃ | -20 to +65 |

*Above specification are for device without connector.

*For devices with connectors, insertion loss will be 0.5dB higher, RL will be 5dB lower, ER will be 2dB lower.

*The PM fiber and the connector key are aligned to the slow axis.

*The material must be RoHS compliant.

## Package Dimensions

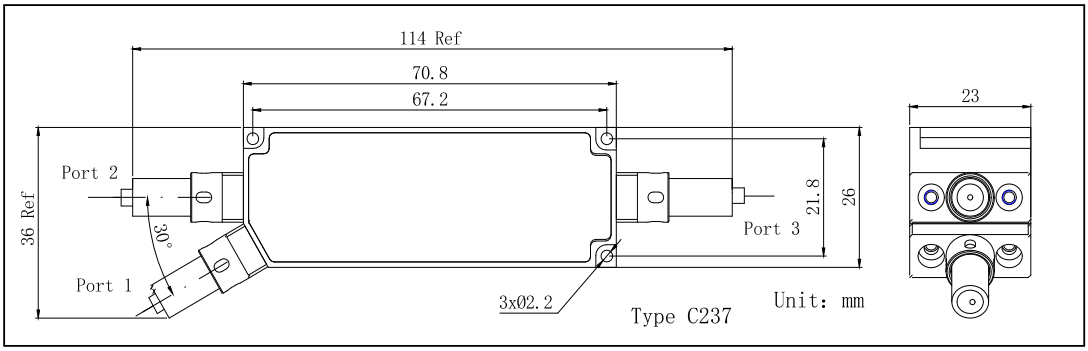


## Ordering Information

**HPMIWDM**-①①①①-②-③③-④-⑤⑤⑤-⑥⑥⑥-⑦-⑧–⑨⑨⑨

①①①①: Signal&Pump Wavelength
0698 - 1064nm signal/980nm pump

②: Pump Type
B - Backward Pump

③③: Handling Power
10 - 10W
S - Specify

④: Axis Alignment
F - Fast Axis Blocked

⑤⑤⑤ : Connector Type
N - None
S - Specify

⑥⑥⑥: Fiber Jacket
B - Bare Fiber

⑦: Fiber Length
0.8 - 0.8m
S - Specify

⑧: Backage Type
C237 - Type C237

⑨⑨⑨: Fiber Type
39 - Liekki YB1200 30/250 DC PM NA0.07 Fiber
45 - PLMA-GDF 10/125-M NA0.075 Fiber
61 - YDF Nufern PM 10/125 NA0.075 Fiber
65 - Nufern PM1060L 10/125 GSF NA0.085 Fiber
80 - MM 105/125-0.22 Fiber
S - Specify

# Polarization Maintaining Isolator WDM Hybrid 15xxnm 300mW

Spec No.:CAT-09-028F Date:

**Specifications**

| Parameters | | Unit | Values | |
|---|---|---|---|---|
| Stage | | | Single Stage | Dual Stage |
| Pass Band | Signal Wavelength Range | nm | 1530~1580 | |
| | Typ. Insertion Loss@P→C or C→P | dB | 0.6 | 0.8 |
| | Max. Insertion Loss@P→C or C→P | dB | 0.8 | 1.0 |
| | Typ. Peak Signal Isolation,at 23℃ | dB | 40 | 55 |
| | Min. Signal Isolation, at 23℃ （1550±15 for S.Stage） | dB | 30 | 48 |
| | Min. Extinction Ratio (only for F-Type) | dB | 23 | |
| | Min. Extinction Ratio (only for B-Type) | dB | 20 | |
| Reflect Band | Wavelength Range | nm | 960~990 or 1460-1490 | |
| | Typ. Insertion Loss@R→C | dB | 0.3(for 1480nm pump);0.4(for 980nm pump) | |
| | Max. Insertion Loss@R→C | dB | 0.5(for 1480nm pump);0.6(for 980nm pump) | |
| Min. Return Loss | | dB | 50 | |
| Max. Optical Power (CW) | | mW | 300 | |
| Max. Tensile Load | | N | 5 | |
| Fiber Type | | | PM 1550nm panda fiber on Common & Pass ports, Hi 1060(for 980nm Pump) or SMF-28e fiber(for 1480nm Pump) on Reflect port | |
| Operating Temperature | | ℃ | -5 to +70 | |
| Storage Temperature | | ℃ | -40 to +85 | |

*Above specification are for device without connector

*For devices with connectors, insertion loss will be 0.3dB higher, RL will be 5dB lower, ER will be 2dB lower

*The signal path is aligned to slow axis.

*The material must be RoHS compliant.

**Package Dimensions**

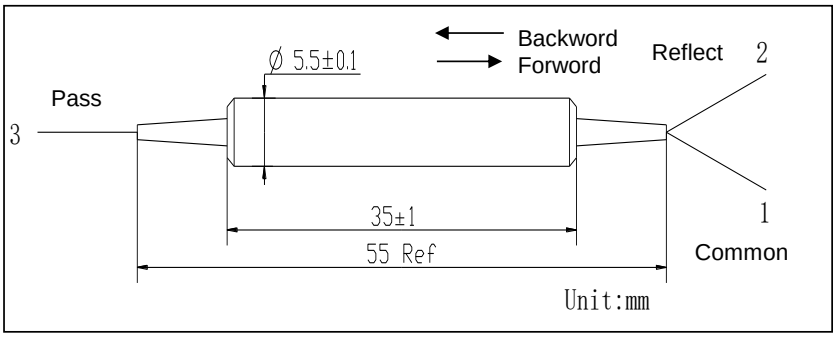


**Ordering Information**

**PMIWDM**-①①①①-②-③-④-⑤⑤-⑥⑥⑥-⑦⑦⑦-⑧-⑨⑨-⑩⑩

①①①①:Signal & Pump Wavelength
5598 - 1550nm signal/980nm pump
5548 - 1550nm Signal/1480nm pump

②: Pump Type
F - Forward Pump
B - Backward Pump

③: Stage
S - Single Stage
D - Dual Stage

④: Axis Alignment
F - Fast Axis Blocked
B - Both Axis Working

⑤⑤: Handling Power
0.3 - 300mW
S - Specify

⑥⑥⑥: Connector Type on Port 1, 2 & 3
1A - FC/UPC
2A - FC/APC
3D - SC/UPC
4D - SC/APC
N - None
S - Specify

⑦⑦⑦: Fiber Jacket on Port 1, 2 & 3
B - 250um Bare Fiber
C - 900um Loose Tube(Red)
D- 900um Loose Tube(Blue)
S - Specify

⑧: Fiber Length
0.8 - 0.8m
S - Specify

⑨⑨: Fiber Type
04A - PM 1550 for 1/3, Hi 1060 for 2
21A - PM 1550 for 1/3, SMF-28e for 2
09A - PM 1550

⑩⑩: Package
01 - Ø5.5x35mm

# High Power Polarization Maintaining Isolator WDM Hybrid 15xxnm 10W

Spec No.: CAT-05-050D Date:

**Specifications**

| Parameters | | Unit | Values | |
|---|---|---|---|---|
| Stage | | | Single Stage | Dual Stage |
| Pass Band | Signal Wavelength Range | nm | 1530~1565 | |
| | Typ. Insertion Loss@P→C or C→P | dB | 0.7 | 0.8 |
| | Max. Insertion Loss@P→C or C→P | dB | 0.9 | 1.0 |
| | Typ. Peak Signal Isolation, at 23℃ | dB | 40 | 55 |
| | Min. Signal Isolation, at 23℃ | dB | 30 | 48 |
| | Min. Extinction Ratio (only for F-Type) | dB | 23 | |
| | Min. Extinction Ratio (only for B-Type) | dB | 20 | |
| Reflect Band | Wavelength Range | nm | 960~990 or 1460-1490 | |
| | Typ. Insertion Loss@R→C | dB | 0.5(for 1480nm pump); 0.6(for 980nm pump) | |
| | Max. Insertion Loss@R→C | dB | 0.7(for 1480nm pump); 0.8(for 980nm pump) | |
| Min. Return Loss | | dB | 50 | |
| Max. Optical Power (CW) | | W | 0.5 , 1 , 3 , 5 or Specify | |
| Max. Peak Power for ns Pulse | | kW | 10 | |
| Max. Tensile Load | | N | 5 | |
| Fiber Type | | | PM 1550nm panda fiber on Common & Pass ports, HI 1060(for 980nm Pump) or SMF-28e fiber(for 1480nm Pump) on Reflect port | |
| Operating Temperature | | ℃ | -5 to +70 | |
| Storage Temperature | | ℃ | -40 to +85 | |

*Above specification are for device without connector

*For devices with connectors, IL will be 0.3dB higher, RL will be 5dB lower , ER will be 2dB lower and optical power is only 1000mW（CW）.

*The signal path is aligned to slow axis.

*The material must be RoHS compliant.

**Package Dimensions**

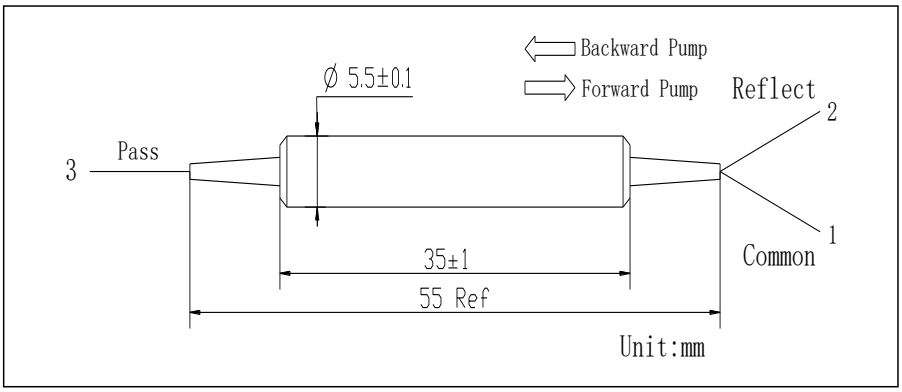


## Ordering Information

**HPMIWDM**-①①①①-②-③-④-⑤⑤-⑥⑥⑥-⑦⑦⑦-⑧-⑨⑨-⑩⑩

①①①①:Signal & Pump Wavelength
5598 - 1550nm signal/980nm pump
5548 - 1550nm Signal/1480nm pump

②: Pump Type
F - Forward Pump
B - Backward Pump

③: Stage
S - Single Stage
D - Dual Stage

④: Axis Alignment
F - Fast Axis Blocked
B - Both Axis Working

⑤⑤: Handling Power
01 - 1W
03 - 3W
SS - Specify

⑥⑥⑥: Connector Type on Port 1, 2 & 3
1A - FC/UPC
2A - FC/APC
3D - SC/UPC
4D - SC/APC
N - None
S - Specify

⑦⑦⑦: Fiber Jacket on Port 1, 2 & 3
B - 250um Bare Fiber

⑧: Fiber Length
0.8 - 0.8m
S - Specify

⑨⑨: Fiber Type
05A - PM 1550 for 1/3, PM 980 for 2
06A - PM 1550 for 3, PM 980 for 1&2
04A - PM 1550 for 1/3, Hi 1060 for 2
21A - PM 1550 for 1/3, SMF-28e for 2

⑩⑩: Package Dimensions

# High Power Polarization Maintaining Isolator Hybrid with BPF 10xxnm 300mW

Spec Review No.: SR2307100A Date: Jul. 31, 2023

## Specifications

| Parameters | Unit | Values |
|---|---|---|
| Nominal Center Wavelength | nm | 1064 |
| Max. Insertion Loss over CWL+/-1.0nm | dB | 2.3 |
| Min. Pass Bandwidth @0.5dB | nm | 2 |
| Max. Stop Bandwidth @25dB | nm | 10 |
| Min. Isolation over CWL+/-1.0nm, Output to Input, at 23℃ | dB | 30 |
| Min. Extinction Ratio for B Type | dB | 20 |
| Min. Extinction Ratio for F Type | dB | 22 |
| Min. Optical Return Loss | dB | 50 |
| Max. Optical Power (Proper SOP,Forward) | -- | 300mW Average Power, 10KW Peak Power |
| Max. Tensile Load | N | 5 |
| Fiber Type | -- | PM 980 Panda Fiber |
| Operating Temperature | ℃ | -5 to +50 |
| Storage Temperature | ℃ | -40 to +85 |

*Above specifications are for device without connector.

*For devices with connectors, IL will be 0.5dB higher, RL will be 5dB lower and ER will be 2dB lower and optical power is only 300mW.

*Optical path and connector key are aligned to slow axis. Band pass filter is on input side of the device.

*The material must be RoHS compliant.

## Package Dimensions

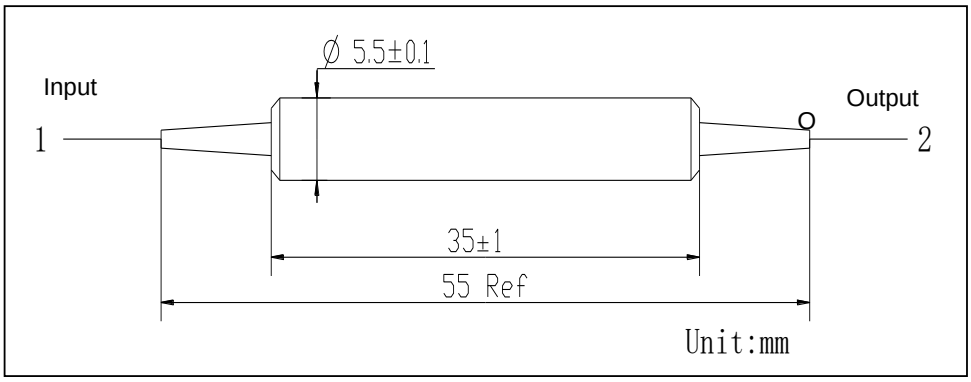


## Ordering Information

**HPMBPFI**-①①①①-②②-③③-④④-⑤-⑥-⑦⑦-⑧⑧-⑨-⑩⑩-⑪⑪

①①①①: Center Wavelength
1064 - 1064nm
SSSS - Specify

②②: Pass Band Width
02 - 2nm
SS - Specify

③③: Stop Band Width
10- 10nm
SS - Specify

④④: Handing Power
0.3 - 300mW/10KW
SS - Specify

⑤: Axis Alignment
F - Fast Axis Blocked
B - Both Axis Working

⑥: Isolator Stage Type
S - Single Stage

⑦⑦: Connector Type
1B - FC/UPC
2B - FC/APC (Step)
3D - SC/UPC
4D - SC/APC (Step)
N - None
SS - Specify

⑧⑧: Fiber Jacket for Port 1 & 2
B - Bare Fiber
C - 900um Loose Tube(Red)
D - 900um Loose Tube(Blue )
E - 900um Loose Tube(Black )
SS - Specify

⑨: Fiber Length
0.8 - 0.8 m
S - Specify

⑩⑩:Fiber Type
02A - PM 980 Fiber

⑪⑪ Package Type
01 - Ø5.5x35

# High Power Polarization Maintaining Isolator Hybrid with BPF 10xxnm 10W

Spec Review No.: SR24007025A Date: Jul. 12, 2024

## Specifications

| Parameters | Unit | Values |
|---|---|---|
| Nominal Center Wavelength | nm | 1030 |
| Min. Pass Bandwidth @0.5dB | nm | 2 |
| Max. Stop Bandwidth @25dB | nm | 6 |
| Min. Isolation at λc ,23℃,(Port2 to Port1) | dB | 26 |
| Typ. Insertion Loss at λc ,23℃, (Port1 to Port2) | dB | 0.7 |
| Max. Insertion Loss at λc ,23℃, (Port1 to Port2) | dB | 1.0 |
| Min. Return Loss,（Port1,Port2） | dB | 50/50 |
| Min. ER at 23℃,（Fast Axis Blocked） | dB | 20 |
| Max. Optical Power (CW) | W | 5 or Specify |
| Max. Peak Power for pulse | kW | 10 @ 1 ns |
| Max. Tensile Load | N | 5 |
| Operating Temperature | ℃ | 10 to +50 |
| Storage Temperature | ℃ | 0 to +75 |

*Above parameter only for inner core.

*Above specifications are for device without connector.

*For devices with connectors, IL will be 0.5dB higher, RL will be 5dB lower , ER will be 2dB lower and optical power is only 1W.

*The PM fiber and connector key are aligned to the slow axis.

* The material must be RoHS compliant.

## Package Dimensions

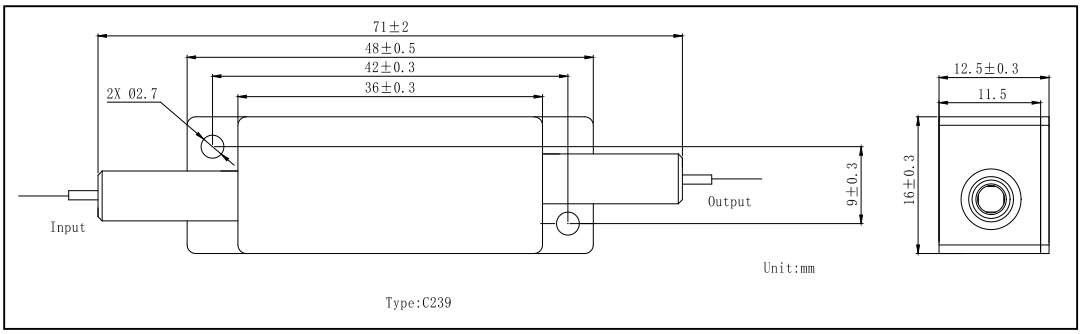


## Ordering Information

**HPMBPFI**-①①①①-②-③③-④④-⑤⑤-⑥-⑦⑦-⑧⑧-⑨-⑩⑩

①①①①: Wavelength
1030 - 1030nm
S - Specify

②: Package Type
C239 - Type C239

③③: Pass Band Width
02 - 2nm
S - Specify

④④: Stop Band Width
06 - 6nm
S - Specify

⑤⑤: Handling Power
05 - 5W
S - Specify

⑥: Axis Alignment
F - Fast Axis Blocked

⑦⑦: Connector Type
N - None
S - Specify

⑧⑧: Fiber Jacket
B - 250um Bare Fiber
C - 900um Loose Tube(Red)

⑨: Fiber Length
0.6 - 0.6m
S - Specify

⑩⑩:Fiber Type
1 - PM 980 Fiber
45 - PLMA-GDF 10/125 -M NA0.075 Fiber
65 - Nufern PM1060L 10/125 GSF NA0.085 Fiber
83 - Nufern-PLMA-GDF-14/125-UF,NA0.07 Fiber
S - Specify

# Polarization Maintaining Isolator Hybrid with BPF 15xxnm 300mW

Spec Review No.: SR2409013A Date: Sep. 13, 2024

## Specifications

| Parameters | Unit | Values | |
|---|---|---|---|
| Stage | -- | Single Stage | Dual Stage |
| Nominal Center Wavelength | nm | 1570 | |
| Min. Pass Bandwidth @0.5dB | nm | 6 | |
| Max. Stop Bandwidth @25dB | nm | 10 | |
| Max. Insertion Loss @ 1570nm | dB | 0.9 | 1.0 |
| Min. Isolation , Output to Input, @1570nm ,23 ℃ | dB | 28 | 48 |
| Min. Extinction Ratio for B type | dB | 20 | |
| Min. Extinction Ratio for F type | dB | 22 | |
| Min. Optical Return Loss | dB | 50 | |
| Max. Optical Power (CW,Forward,Proper SOP) | mW | 300 | |
| Max. Tensile Load | N | 5 | |
| Fiber Type | - | PM 1550 Panda Fiber | |
| Operating Temperature | ℃ | -5 to +70 | |
| Storage Temperature | ℃ | -40 to +85 | |

*Above specifications are for device without connector.

*For devices with connectors, IL will be 0.3dB higher, RL will be 5dB lower and ER will be 2dB lower.

*Optical path and connector key are aligned to slow axis. Band pass filter is on output side of the device.

*The material must be RoHS compliant.

## Package Dimensions

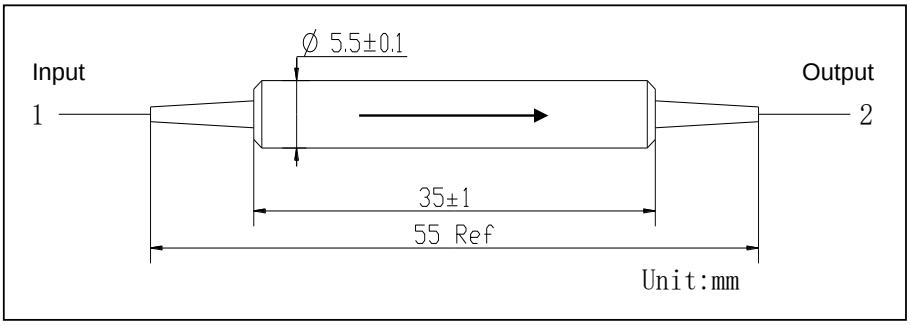


## Ordering Information

**PMBPFI**-①①①①-②②-③③-④-⑤-⑥-⑦⑦-⑧⑧-⑨-⑩⑩-⑪⑪

①①①①: Center Wavelength
1570 - 1570nm
SSSS - Specify

②②: Pass Band Width
06 - 6nm
SS - Specify

③③: Stop Band Width
10 -10nm
SS - Specify

④:Handling Power
0.3 - 300mW
S - Specify

⑤: Axis Alignment
F - Fast Axis Blocked
B - Both Axis Working

⑥: Isolator Stage Type
S - Single Stage
D - Dual Stage

⑦⑦: Connector Type on Port 1 & 2
1B - FC/UPC
2B - FC/APC (Step)
3D - SC/UPC
4D - SC/APC (Step)
N - None
SS - Specify

⑧⑧: Fiber Jacket on Port 1 & 2
B - 250um Bare Fiber
C - 900um Loose Tube (Red)
D - 900um Loose Tube (Blue )
E - 900um Loose Tube (Black )
SS - Specify

⑨: Fiber Length
0.8 - 0.8m
S - Specify

⑩⑩:Fiber Type
01B - PM1550 Fiber

⑪⑪:Package Type
01 - Ø5.5x35

# High Power Polarization Maintaining Isolator Hybrid with BPF 15xxnm 10W

Spec Review No.: SR2408020A Date: Aug. 12, 2024

## Specifications

| Parameters | Unit | Values | |
|---|---|---|---|
| Stage | -- | Single Stage | Dual Stage |
| Nominal Center Wavelength | nm | 1585 | |
| Min. Pass Bandwidth @0.5dB | nm | 5.5 | |
| Max. Stop Bandwidth @25dB | nm | 12 | |
| Max. Insertion Loss @ 1585±2.5nm | dB | 0.9 | 1.0 |
| Min. Isolation , Output to Input, @1585±2.5nm ,23 ℃ | dB | 30 | 48 |
| Min. Extinction Ratio for B type | dB | 20 | |
| Min. Extinction Ratio for F type | dB | 22 | |
| Min. Optical Return Loss | dB | 50 | |
| Max. Optical Power (CW,Forward,Proper SOP) | mW | 300mW Average Power, 1KW Peak Power | |
| Max. Tensile Load | N | 5 | |
| Fiber Type | - | PM 1550 Panda Fiber | |
| Operating Temperature | ℃ | -5 to +70 | |
| Storage Temperature | ℃ | -40 to +85 | |

*Above specifications are for device without connector.

*For devices with connectors, IL will be 0.3dB higher, RL will be 5dB lower and ER will be 2dB lower and optical power is only 1000mW(CW).

*Optical path and connector key are aligned to slow axis. Band pass filter is on input side of the device.

*The material must be RoHS compliant.

## Package Dimensions

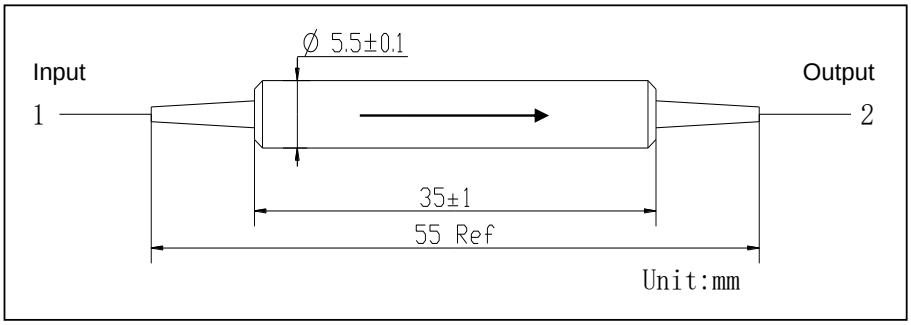


## Ordering Information

**HPMBPFI**-①①①①-②②-③③-④-⑤-⑥-⑦⑦-⑧⑧-⑨-⑩⑩-⑪⑪

①①①①: Center Wavelength
1585 - 1585nm
SSSS - Specify

②②: Pass Band Width
5.5 - 5.5nm
SS - Specify

③③: Stop Band Width
12 - 12nm
SS - Specify

④:Handling Power
0.3 - 300mW/1KW
S - Specify

⑤: Axis Alignment
F - Fast Axis Blocked
B - Both Axis Working

⑥: Isolator Stage Type
S - Single Stage
D - Dual Stage

⑦⑦: Connector Type on Port 1 & 2
1B - FC/UPC
2B - FC/APC (Step)
3D - SC/UPC
4D - SC/APC (Step)
N - None
S - Specify

⑧⑧: Fiber Jacket on Port 1 & 2
B - 250um Bare Fiber
C - 900um Loose Tube (Red)
D - 900um Loose Tube (Blue )
E - 900um Loose Tube (Black )
S - Specify

⑨: Fiber Length
0.8 - 0.8m
S - Specify

⑩⑩: Fiber Type
01B - PM1550 Fiber

⑪⑪: Package Type
01 - Ø5.5x35

# High Power Polarization Maintaining Isolator Hybrid with Tap and WDM 1064nm 300mW

Spec Review No.:SR2312026A Date:December.06, 2023

## Specifications

| | | |
|---|---|---|
| Signal Wavelength Range | nm | 1060~1070 |
| Pump Wavelength Range | nm | 960~990 |
| Max. Signal Insertion Loss@1064nm, 23℃ (Signal to Output) | dB | 2.45(5%) |
| Max. Signal Insertion Loss@1060~1070nm, 0~50℃ (Signal to Output) | dB | 2.95(5%) |
| Max. Pump Insertion Loss(Pump to Output) | dB | 0.7 |
| Signal Tap Ratio(Signal to Tap) | % | 5+/-1 |
| Typ. Signal Peak Isolation(Output to Signal) | dB | 35 |
| Min. Signal Isolation at 23℃(Output to Signal) | dB | 30 |
| Min. Isolation(for Signal to output @Pump Wavelength) | dB | 30 |
| Min. Isolation(for Output to Pump@Signal Wavelength) | dB | 12 |
| Min. Directivity(@980nm for Pump to Signal & Tap) | dB | 50 |
| Min. Extinction Ratio(Signal to Output) | dB | 25 |
| Max. PDL(Signal to Tap & Pump to Output) | dB | 0.1 |
| Min. Return Loss (for all Ports) | dB | 50 |
| Max. Optical Power | - | Average 1060-1070nm Power 300mW, Peak Power 3KW, Pulse Energy 30nJ. |
| Max. Tensile Load | N | 5 |
| Fiber Type | - | PM 980 Panda Fiber for Signal and Output Ports,<br>Hi 1060 Fiber for Pump and Tap Port |
| Operating Temperature | ℃ | 0 to +50 |
| Storage Temperature | ℃ | -40 to +85 |

*Above specifications are for device without connector.
*For devices with connectors, IL will be 0.5dB higher, RL will be 5dB lower, ER will be 2dB lower.
*The PM fiber and the connector key are aligned to the slow axis.
*The material must be RoHS compliant.

### Package Dimensions

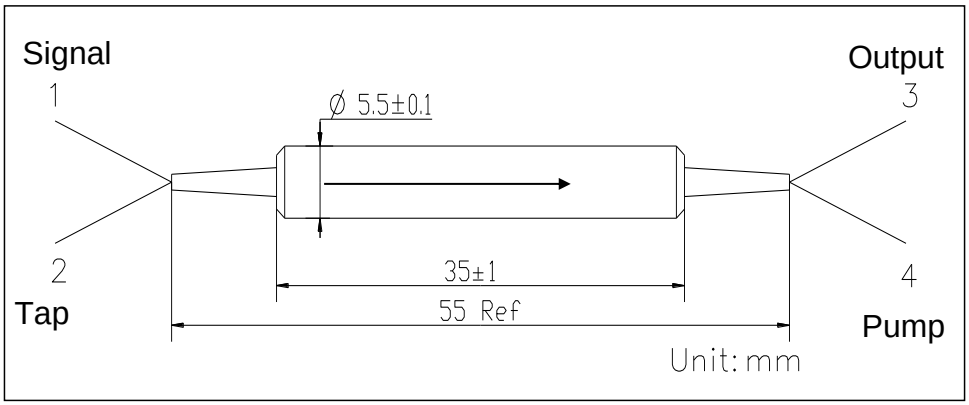


### Ordering Information

**HPMTIWDM**-①①①①-②-③-④④-⑤-⑥⑥-⑦⑦⑦⑦-⑧⑧⑧⑧-⑨-⑩⑩-⑪⑪

①①①①:Signal & Pump Wavelength
0698 - 1064nm / 980nm
SSSS - Specify

②: Pump Direction
F - Forward Pump

③: Stage Type
S - Single Stage

④④: Tap Ratio
05 - 5%

⑤: Axis Alignment
F - Fast Axis Blocked

⑥:Handling Power
0.3 - 300mW

⑦⑦⑦⑦: Connector Type on Port 1, 2, 3 & 4
1A - FC/UPC
2A - FC/APC (Step)
N - None
S - Specify

⑧⑧⑧⑧: Fiber Jacket on Port 1, 2, 3 & 4
B - 250um Bare Fiber
C - 900um Loose Tube(Red)
D - 900um Loose Tube(Blue)
F - 900um Loose Tube(White)
S - Specify

⑨: Fiber Length
1 - 1.0m
S - Specify

⑩⑩: Fiber Type
06B - Hi 1060 for Pump&Tap, PM980 for Others

⑪⑪: Package Dimensions
01 - Ø5.5x35

# Polarization Maintaining Isolator Hybrid with Tap and WDM 15xxnm 300mW

Spec No.: CAT-09-031F Date:

**Specifications**

| Parameters | Unit | Values | |
|---|---|---|---|
| Stage | | Single Stage | Dual Stage |
| Signal Wavelength Range | nm | 1530~1565 | |
| Pump Wavelength Range | nm | 960~990 or 1460~1490 | |
| Max. Signal Insertion Loss (Input to Output) | dB | 1.1(for 1%), 1.2(for 2%),1.3(for 5%), 1.5(for 10%), 4.2(for 50%) | 1.2(for 1%), 1.3(for 2%),1.4(for 5%), 1.6(for 10%), 4.3(for 50%) |
| Max. Pump Insertion Loss | dB | 0.5(for 1480nm pump);0.6(for 980nm pump) | |
| Signal Tap Ratio( Input to Tap) | % | 1+/-0.2, 2+/-0.4, 5+/-1, 10+/-2, 50 | |
| Typ. Signal Peak Isolation (Output to Input) | dB | 40 | 55 |
| Min. Signal Isolation at 23℃; all polarization states | dB | 30 | 48 |
| Min. Directivity (Pump to Tap) | dB | 50 | |
| Min.Extinction Ratio (Input to Output, only for F-type) | dB | 23 | |
| Min.Extinction Ratio (Input to Output, only for B-type) | dB | 20 | |
| Min. Return Loss (for all ports) | dB | 50 | |
| Max. Optical Power CW | mW | 500 | |
| Max. Tensile Load | N | 5 | |
| Fiber Type | | PM 1550 Panda Fiber for Input and Output Ports, SMF-28e Fiber for Tap Port, HI 1060(980nm Pump) or SMF-28e(for 1480nm Pump) Fiber for Pump Port | |
| Operating Temperature | ℃ | 0 to +70 | |
| Storage Temperature | ℃ | -40 to +85 | |

*Above specifications are for device without connector.

*For devices with connectors, IL will be 0.3dB higher, RL will be 5dB lower,ER will be 2dB lower.

*The PM fiber and the connector key are aligned to the slow axis.

*The material must be RoHS compliant.

**Package Dimensions**

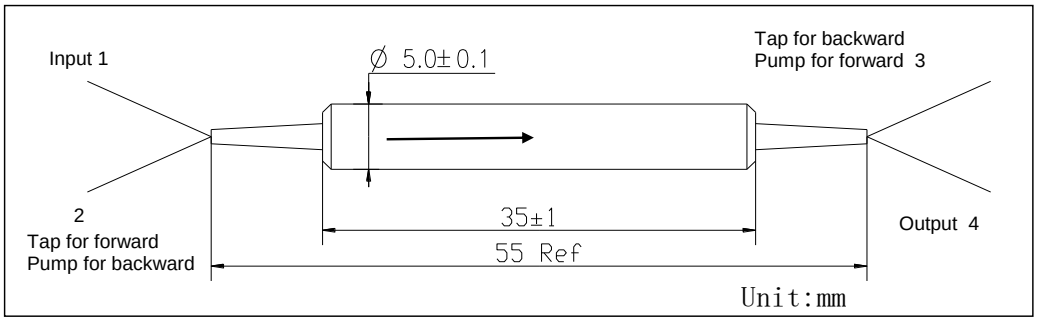


**Ordering Information**

**PMTIWDM-①①①①-②-③-④④-⑤-⑥-⑦⑦⑦⑦-⑧⑧⑧⑧-⑨-⑩⑩-⑪⑪**

①①①①: Signal & Pump Wavelength
5598 - 1550nm/980nm
5548 - 1550nm/1480nm

②: Pump Direction
F - Forward Pump
B - Backward Pump (only for Fast Axis Blocked)

③: Stage
S - Single Stage
D - Dual Stage

④④: Tap Ratio
01 - 1%
02 - 2%
05 - 5%
10 - 10%
50 - 50%
SS - Specify

⑤: Axis Alignment
F - Fast Axis Blocked
B - Both Axis Working

⑥:Handling Power
0.5 - 500mW

⑦⑦⑦⑦: Connector Type on Port 1, 2, 3 & 4
1A - FC/UPC
2A - FC/APC （Step）
3D - SC/UPC
4D - SC/APC
N - None
S - Specify

⑧⑧⑧⑧: Fiber Jacket on Port 1, 2, 3 & 4
B - 250um Bare Fiber
C - 900um Loose Tube(Red)
D - 900um Loose Tube(Blue)
F - 900um Loose Tube(White)
S - Specify

⑨: Fiber Length
0.8 - 0.8m
S - Specify

⑩⑩: Fiber Type
01A - PM 980 for Pump,PM1550 for Others
02A- PM 980 for Pump&Input, PM1550 for Others
03A- Hi 1060 for Pump,PM1550 for Others
04A- Hi 1060 for Pump,SMF-28e for Tap, PM1550 for Others
10A- Hi1060 for Pump, PM980 For Common, PM1550 for Others

⑪⑪: Package
01 - Ø5.5x35mm
05 - Ø5.0x35mm

# High Power Polarization Maintaining Isolator Hybrid with Tap and WDM 1550nm 10W

Spec Review No.:SR2301703B Date: November.13, 2023

**Specifications**

| Parameters | Unit | Values | |
|---|---|---|---|
| Stage | | Single Stage | Dual Stage |
| Signal Wavelength Range | nm | 1530~1565 | |
| Pump Wavelength Range | nm | 960~990 or 1460~1490 | |
| Max. Signal Insertion Loss (Input to Output) | dB | 1.1(for 1%), 1.2(for 2%),1.3(for 5%), 1.5(for 10%), 4.2(for 50%) | 1.2(for 1%), 1.3(for 2%),1.4(for 5%), 1.6(for 10%), 4.3(for 50%) |
| Max. Pump Insertion Loss | dB | 0.5(for 1480nm pump);0.6(for 980nm pump) | |
| Signal Tap Ratio( Input to Tap) | % | 1+/-0.2, 2+/-0.4, 5+/-1, 10+/-2, 50 | |
| Typ. Signal Peak Isolation (Output to Input) | dB | 40 | 55 |
| Min. Signal Isolation at 23℃; all polarization states | dB | 30 | 48 |
| Min. Directivity (Pump to Tap) | dB | 50 | |
| Min.Extinction Ratio (Input to Output, only for F-type) | dB | 23 | |
| Min.Extinction Ratio (Input to Output, only for B-type) | dB | 20 | |
| Min. Return Loss (for all ports) | dB | 50 | |
| Max. Optical Power CW | mW | 500 | |
| Max. Tensile Load | N | 5 | |
| Fiber Type | - | PM 1550 Panda Fiber for Input and Output Ports, SMF-28e Fiber for Tap Port, HI 1060(980nm Pump) or SMF-28e(for 1480nm Pump) Fiber for Pump Port | |
| Operating Temperature | ℃ | 0 to +70 | |
| Storage Temperature | ℃ | -40 to +85 | |

*Above specifications are for device without connector.

*For devices with connectors, IL will be 0.3dB higher, RL will be 5dB lower,ER will be 2dB lower.

*The PM fiber and the connector key are aligned to the slow axis.

*The material must be RoHS compliant.

**Package Dimensions**

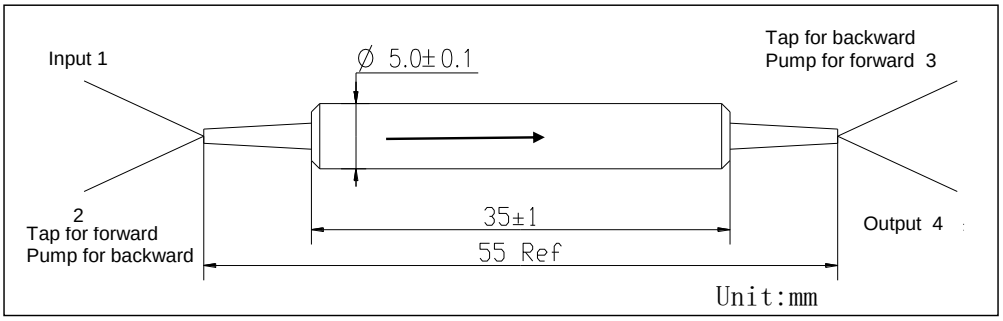


**Ordering Information**

**HPMTIWDM-①①①①-②-③-④④-⑤-⑥⑥-⑦⑦⑦⑦-⑧⑧⑧⑧-⑨-⑩⑩-⑪⑪**

①①①①: Signal & Pump Wavelength
5598 - 1550nm/980nm
5548 - 1550nm/1480nm

②: Pump Direction
F - Forward Pump
B - Backward Pump (only for Fast Axis Blocked)

③: Stage
S - Single Stage
D - Dual Stage

④④: Tap Ratio
01 - 1%
02 - 2%
05 - 5%
10 - 10%
50 - 50%
SS - Specify

⑤: Axis Alignment
F - Fast Axis Blocked
B - Both Axis Working

⑥⑥: Handling Power
0.5 - 0.5W
SS - Specify

⑦⑦⑦⑦: Connector Type on Port 1, 2 3 &4
1B- FC/UPC
2B - FC/APC(Step)
8B - LC/APC
N - None
S - Specify

⑧⑧⑧⑧: Fiber Jacket on Port 1, 2 3 &4
B - 250um Fiber
C - 900um Loose Tube(Red)
S - Specify

⑨: Fiber Length
0.5 - 0.5m
S - Specify

⑩⑩: Fiber Type
01B - PM 980 for Pump, PM1550 for Others
04B - Hi 1060 for Pump, SMF-28e for Tap, PM1550 for Others
11B - SMF-28e for Pump&Tap, PM1550 for Others
S - Specify

⑪⑪: Package Dimensions
01 - Ø5.5x35
05 - Ø5.0x35

# Polarization Maintaining Isolator Hybrid with Tap and WDM 19xxnm 300mW

Spec Review No.:SR1708030B Date: Sep. 12, 2017

## Specifications

| Parameters | Unit | Single Stage | Dual Stage |
|---|---|---|---|
| Signal Wavelength Range | nm | 1900~2000 | |
| Pump Wavelength Range | nm | 1520~1580 | |
| Max. Signal Insertion Loss @1940nm(Signal to Output) | dB | 1.96(10%) | 2.26(10%) |
| Min. Signal Isolation @1940nm, 23℃(Output to Signal) | dB | 18 | 32 |
| Normal Signal Tap Ratio(Signal to Tap) | - | 10±2.5%, 30±4% | |
| Typ. Pump Insertion Loss(Pump to Output) | dB | 0.7 | |
| Max. Pump Insertion Loss(Pump to Output) | dB | 0.9 | |
| Min. Isolation(for Signal to Output @Pump Wavelength) | dB | 25 | |
| Min. Isolation(for Output to Pump @1940nm) | dB | 12 | |
| Min. Directivity(@1940nm for Pump to Signal & Tap and @1560nm for Signal to Pump) | dB | 50 | |
| Min. ER | dB | 16 | |
| Min. Return Loss (for all ports) | dB | 50 | |
| Max. Optical Power (CW, for F Type, proper SOP) | mW | 300 | |
| Max. Tensile Load | N | 5 | |
| Fiber Type | - | PM1950 | |
| Operating Temperature | ℃ | 0 to +50 | |
| Storage Temperature | ℃ | -40 to +85 | |

*Above specifications are for device without connector.

*For devices with connectors, IL will be 0.3dB higher, RL will be 5dB lower.

## Package Dimensions


## Ordering Information

**PMTIWDM**-①①①①-②-③-④④-⑤-⑥⑥⑥⑥-⑦⑦⑦⑦-⑧

①①①①:Signal & Pump Wavelength
1956 - 1950nm Signal / 1560nm Pump
SSSS - Specify

②: Pump Direction
F - Forward Pump

③: Stage Type
S - Single Stage
D - Dual Stage

④④: Tap Ratio
10 - 10%
30 - 30%

⑤: Axis Alignment
F - Fast Axis Blocked
B - Both Axis Working

⑥⑥⑥⑥: Connector Type on port 1,2,3&4
1 - FC/UPC
2 - FC/APC
3 - SC/UPC
4 - SC/APC
N - None
S - Specify

⑦⑦⑦⑦: Fiber Jacket on port 1,2,3&4
B - 250um bare fiber
L - 900um loose tube
S - Specify

⑧: Fiber Length
1 - 1.0 m
S - Specify

# Polarization Beam Combiner/Splitter 10xxnm 300mW

Spec No.: CAT-09-007D Date:

**Specifications**

| Parameter | Unit | Values | |
|---|---|---|---|
| Grade | - | Grade P | Grade A |
| Center Wavelength | nm | 1064 | |
| Operating Wavelength Range | nm | ±20 | |
| Typ. Insertion Loss | dB | 0.6 | 0.7 |
| Max. Insertion Loss | dB | 0.8 | 0.9 |
| Min. Return Loss | dB | 50 | |
| Min. Extinction Ratio (for Splitter only ) | dB | 22 | 20 |
| Min.PDL 23°C (only for HI1060 Fiber on all ports) | dB | 20 | |
| Min. Directivity | dB | 50 | |
| Max. Optical Power (CW) | mW | 300 | |
| Max. Tensile Load | N | 5 | |
| Fiber Type | - | PM 980 Panda Fiber on Port 1 and 2 | |
| Operating Temperature | ℃ | -5 to + 70 | |
| Storage Temperature | ℃ | -40 to +85 | |

*Above specifications are for device without connector.

*For devices with connectors, IL will be 0.5dB higher, RL will be 5dB lower and ER will be 2dB lower.

*The PM fiber and the connector key are aligned to the slow axis.

*The material must be RoHS compliant.

**Package Dimensions**

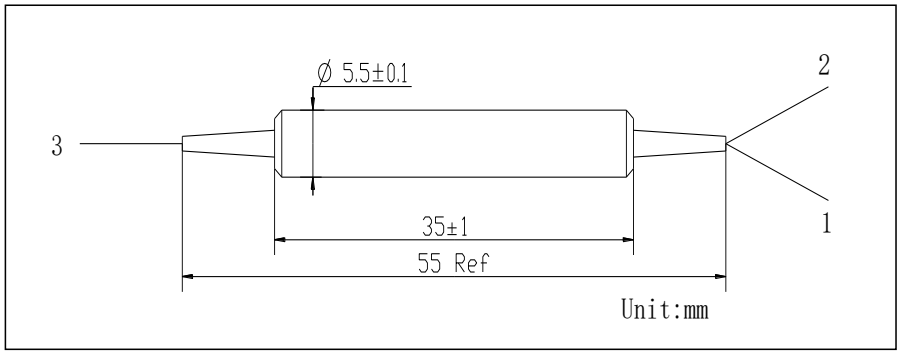


**Ordering Information**

**PBC-①①①①-②-③-④④④-⑤⑤⑤-⑥-⑦-⑧-⑨**

**PBS-①①①①-②-③-④④④-⑤⑤⑤-⑥-⑦-⑧-⑨**

①①①①: Wavelength
1064 - 1064nm
S - Specify

②: Grade
P - Premium
A - A Grade

③: Port
1 - 1x2

④④④: Connector Type on Port 1, 2 &3
1A - FC/UPC
2A - FC/APC
3D - SC/UPC
4D - SC/APC
N - None
S - Specify

⑤⑤⑤: Fiber Jacket on Port 1, 2 &3
B - Bare Fiber
C - 900um Red Loose Tube
F - 900um White Loose Tube
S - Specify

⑥: Fiber Type
03A - Port 1, 2&3: PM980
11A - Port 1&2: PM980, Port 3: HI 1060 Fiber
S - Specify

⑦: Axis Alignment on Port 3
1 - HI 1060 Fiber
2 - PM Panda Fiber, Slow Axis align 45°to Port 1
3 - PM Panda Fiber, Slow Axis align to Port 1
4 - All ports are HI1060
5 - PM Fiber, Fast Axis Align to Port 1
6 - PM Fiber, Slow Axis Align to Port 1 and Fast Axis Align to Port 2

⑧: Fiber Length
0.8 - 0.8m
S - Specify

⑨: Package Type
01 - Ø5.5×35

# High Power Polarization Beam Combiner/Splitter 10xxnm 10W

Spec No.: CAT-05-052C Date:

**Specifications**

| Parameter | Unit | Values | |
|---|---|---|---|
| Grade | - | Grade P | Grade A |
| Center Wavelength | nm | 1064 | |
| Operating Wavelength Range | nm | ±20 | |
| Typ. Insertion Loss | dB | 0.8 | 0.9 |
| Max. Insertion Loss | dB | 1 | 1.1 |
| Min. Return Loss | dB | 50 | |
| Min. Extinction Ratio (for Splitter only ) | dB | 22 | 20 |
| Min.PDL 23°C (only for HI1060 Fiber on all ports) | dB | 20 | |
| Min. Directivity | dB | 50 | |
| Max. Optical Power (CW) | W | 0.5, 1, 1.5, 2 or Specify | |
| Max. Peak Power for ns Pulse | kW | 10 | |
| Max. Tensile Load | N | 5 | |
| Operating Temperature | ℃ | -5 to + 70 | |
| Storage Temperature | ℃ | -40 to +85 | |

*Above specifications are for device without connector.

*For devices with connectors, IL will be 0.5dB higher, RL will be 5dB lower and ER will be 2dB lower and optical power is only 1000mW(CW).

*The PM fiber and the connector key are aligned to the slow axis.

*The material must be RoHS compliant.

**Package Dimensions**

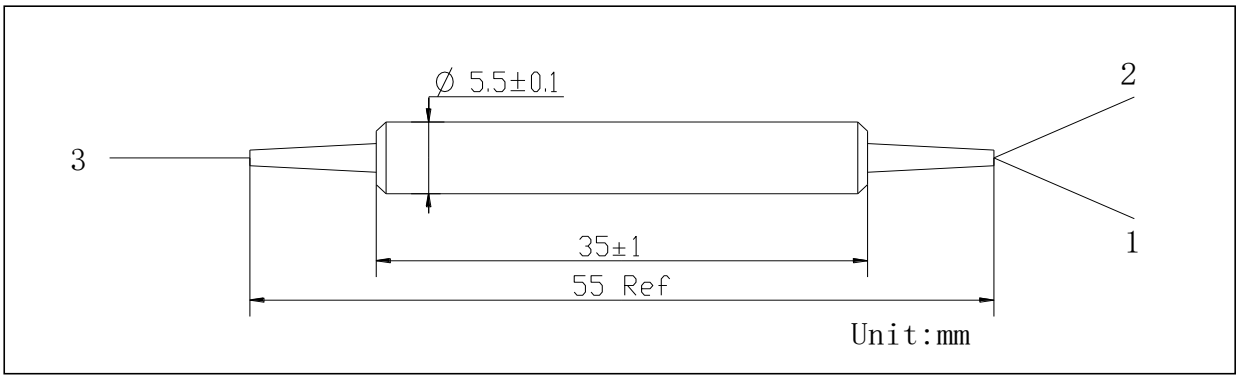


**Ordering Information**

**HPBC**-①-②-③-④-⑤⑤⑤-⑥⑥⑥-⑦-⑧-⑨-⑩

**HPBS**-①-②-③-④-⑤⑤⑤-⑥⑥⑥-⑦-⑧-⑨-⑩

①: Wavelength
1064 - 1064nm
S - Specify

②: Grade
P - Premium
A - A Grade

③: Port
1 - 1x2

④: Handling Power
01 - 1W
S - Specify

⑤⑤⑤: Connector Type on Port 1, 2 &3
1B - FC/UPC
2B - FC/APC
3B - SC/UPC
4B - SC/APC
N - None
S - Specify

⑥⑥⑥: Fiber Jacket on Port 1, 2 &3
B - Bare Fiber
C - 900um Red Loose Tube
E - 900um Black Loose Tube
F - 900um White Loose Tube
SS - Specify

⑦: Fiber Type
03B - Port 1, 2&3: PM980
11B - Port 1&2: PM980, Port 3: HI 1060 Fiber
S - Specify

⑧: Axis Alignment on Port 3
1 - HI 1060 Fiber
2 - PM Panda Fiber, Slow Axis align 45°to Port 1
3 - PM Panda Fiber, Slow Axis align to Port 1
4 - All ports are HI1060
5 - PM Fiber, Fast Axis Align to Port 1
6 - PM Fiber, Slow Axis Align to Port 1 and Fast Axis Align to Port 2

⑨: Fiber Length
0.8 - 0.8m
S - Specify

⑩: Package Type
01 - Ø5.5×35

## Polarization Beam Combiner/Splitter 15xxnm 300mW

Spec No.: CAT-09-009D Date:

**Specifications**

| Parameter | Unit | Values | |
|---|---|---|---|
| Grade | | Grade P | Grade A |
| Center Wavelength | nm | 1310,1480 or 1550 | |
| Operating Wavelength Range | nm | ±40 | |
| Typ. Insertion Loss | dB | 0.4 | 0.5 |
| Max. Insertion Loss | dB | 0.6 | 0.7 |
| Min. Return Loss | dB | 50 | |
| Min. Extinction Ratio (for Splitter only) | dB | 22 | 20 |
| Min.PDL 23°C (only for SMF-28e Fiber on All Ports) | dB | 20 | |
| Min. Directivity | dB | 50 | |
| Max. Optical Power (CW) | mW | 500 | |
| Max. Tensile Load | N | 5 | |
| Fiber Type | | PM Panda Fiber on Port 1 & 2 or Specify | |
| Operating Temperature | ℃ | -5 to +70 | |
| Storage Temperature | ℃ | -40 to +85 | |

*Above specifications are for device without connector.

*For devices with connectors, IL will be 0.3dB higher, RL will be 5dB lower and ER will be 2dB lower.

*The PM fiber and the connector key are aligned to the slow axis.

*The material must be RoHS compliant.

**Package Dimensions**

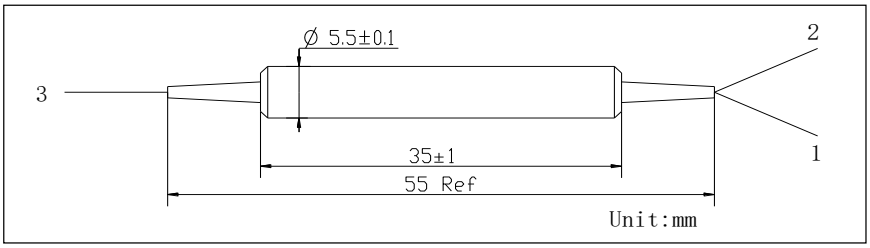


**Ordering Information**

**PBC**-①-②-③-④④④-⑤⑤⑤-⑥-⑦-⑧-⑨

**PBS**-①-②-③-④④④-⑤⑤⑤-⑥-⑦-⑧-⑨

①: Wavelength
1310 - 1310nm
1480 - 1480nm
1550 - 1550nm
S - Specify

②: Grade
P - Premium
A - A Grade

③: Port
1 - 1x2

④④④: Connector Type on Port 1, 2 &3
1A - FC/UPC
2A - FC/APC
3D - SC/UPC
4D - SC/APC
N - None
S - Specify

⑤⑤⑤: Fiber Jacket on Port 1, 2 &3
B - Bare Fiber
C - 900um Red Loose Tube
F - 900um White Loose Tube
S - Specify

⑥: Fiber Type
05B - Port 1, 2&3: PM1300
07B - Port 1, 2&3: PM1550
13B - Port 1&2: PM1300, Port 3: SMF-28e
15B - Port 1&2: PM1550, Port 3: SMF-28e
19 - Port 1, 2&3: SMF-28e
S - Specify

⑦: Axis Alignment on Port 3
1 - SM Fiber, Align to Port 1 &2 Slow Axis
2 - PM Fiber, Slow Axis Align 45°to Port 1
3 - PM Fiber, Slow Axis Align to Port 1
4 - All Ports are SM Fiber
5 - PM Fiber, Fast Axis Align to Port 1
6 - PM Fiber, Slow Axis Align to Slow Axis of Port 1 and Fast Axis Align to Fast Axis of Port 2
7 - PM Fiber, Align to SM Fiber Port 1
8 - PM Fiber, Align 45° to SM Fiber Port 1
9 - PM Fiber, Align 45° to Port 1, Port 2 Align to Fast Axis
10 - SM Fiber, Align to Port 1&2 Fast Axis

⑧: Fiber Length
0.8 - 0.8m
S - Specify

⑨: Package Type
01 - Ø5.5×35

# High Power Polarization Beam Combiner/Splitter 15xxnm 10W

Spec No.: CAT-05-053C Date:

**Specifications**

| Parameter | Unit | Values | |
|---|---|---|---|
| Grade | - | Grade P | Grade A |
| Center Wavelength | nm | 1310,1480 or 1550 | |
| Operating Wavelength Range | nm | ±40 | |
| Typ. Insertion loss | dB | 0.6 | 0.7 |
| Max. Insertion loss | dB | 0.8 | 0.9 |
| Min. Return Loss | dB | 50 | |
| Min. Extinction Ratio (for Splitter only) | dB | 22 | 20 |
| Min. PDL 23°C (only for SMF-28e Fiber on all ports) | dB | 20 | |
| Min. Directivity | dB | 50 | |
| Max. Optical Power (CW) | W | 1, 3, 5 or Specify | |
| Max. Peak Power for ns Pulse | kW | 10 | |
| Max. Tensile Load | N | 5 | |
| Fiber Type | - | PM Panda Fiber on Port 1 & 2 or Specify | |
| Operating Temperature | ℃ | -5 to +70 | |
| Storage Temperature | ℃ | -40 to +85 | |

*Above specifications are for device without connector.

*For devices with connectors, IL will be 0.3dB higher, RL will be 5dB lower and ER will be 2dB lower and optical power is only 1000mW(CW).

*The PM fiber and the connector key are aligned to the slow axis.

*The material must be RoHS compliant.

**Package Dimensions**

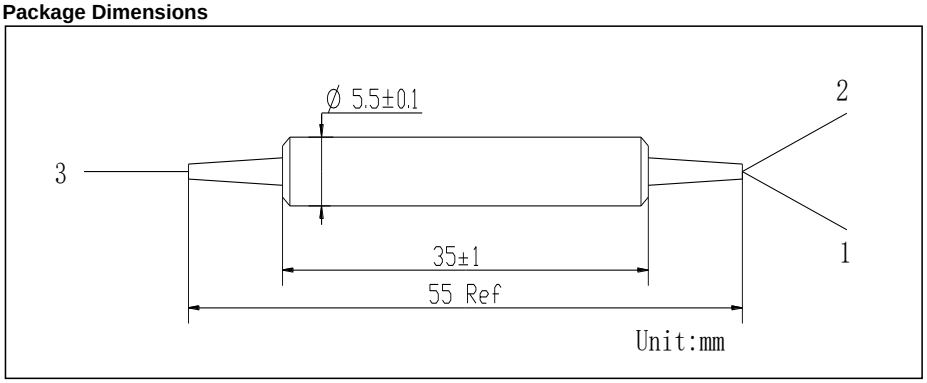


Ordering Information

HPBC-①①①①-②-③-④④-⑤⑤⑤-⑥⑥⑥-⑦-⑧-⑨-⑩

HPBS-①①①①-②-③-④④-⑤⑤⑤-⑥⑥⑥-⑦-⑧-⑨-⑩

①①①①: Wavelength
1310 - 1310nm
1480 - 1480nm
1550 - 1550nm
S - Specify

②: Grade
P - Premium
A - A Grade

③: Port
1 - 1x2

④④: Handling Power
01 - 01W
SS - Specify

⑤⑤⑤: Connector Type on Port 1, 2 &3
1B - FC/UPC
2B - FC/APC
3D - SC/UPC
4D - SC/APC
N - None
S - Specify

⑥⑥⑥: Fiber Jacket on Port 1, 2 &3
B - Bare Fiber
C - 900um Red Loose Tube
F - 900um White Loose Tube
S - Specify

⑦: Fiber Type
05B - Port 1, 2&3: PM1300
07B - Port 1, 2&3: PM1550
13B - Port 1&2: PM1300, Port 3: SMF-28e
15B - Port 1&2: PM1550, Port 3: SMF-28e
19 - Port 1, 2&3: SMF-28e
S - Specify

⑧: Axis Alignment on Port 3
1 - SM Fiber, Align to Port 1 &2 Slow Axis
2 - PM Fiber, Slow Axis Align 45° to Port 1
3 - PM Fiber, Slow Axis Align to Port 1
4 - All Ports are SM Fiber
S - Specify

⑨: Fiber Length
0.8 - 0.8m
S - Specify

⑩: Package Type
01 - Ø5.5×35
S - Specify

# Polarization Beam Combiner/Splitter 19xxnm 300mW

Spec No.: CAT-10-014D Date:

**Specifications**

| Parameter | Unit | Values | |
|---|---|---|---|
| Grade | - | Grade P | |
| Center Wavelength | nm | 2000 | |
| Operating Wavelength Range | nm | ±50 | |
| Typ. Insertion Loss(Excess Loss) | dB | 0.8 | 1.0 |
| Max. Insertion Loss(Excess Loss) | dB | 1.0 | 1.3 |
| Min. Return Loss | dB | 50 | |
| Min. Extinction Ratio (for Splitter only) | dB | 20 | |
| Min. Directivity | dB | 50 | |
| Max. Optical Power (CW) | mW | 500 | |
| Max. Tensile Load | N | 5 | |
| Fiber Type | - | PM 1550 Panda Fiber on Port 1 and 2 | PM 1950 Panda Fiber on Port 1 and 2 |
| Operating Temperature | ℃ | -5 to + 70 | |
| Storage Temperature | ℃ | -40 to +85 | |

* Above specifications are for device without connector.
* For devices with connectors, IL will be 0.3dB higher, RL will be 5dB lower and ER will be 2dB lower.
* The PM fiber and the connector key are aligned to the slow axis.
* The material must be RoHS compliant.

**Package Dimensions**

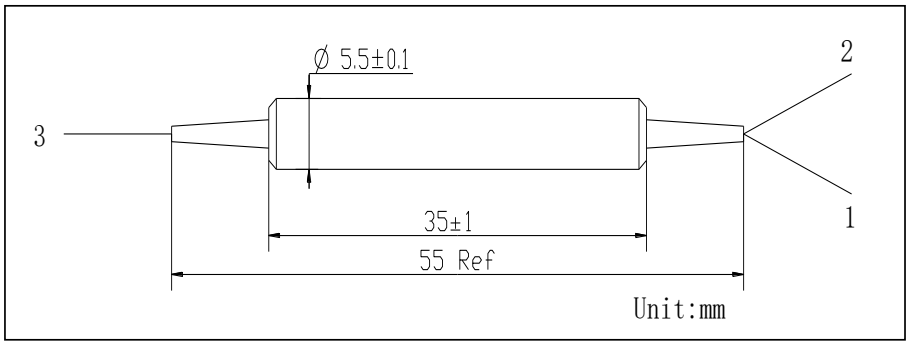


**Ordering Information**

**PBC/PBS**-①-②-③-④-⑤⑤⑤-⑥⑥⑥-⑦-⑧-⑨-⑩

①: Wavelength
20 - 2000nm
S - Specify

②: Grade
P - Premium

③: Port
1 - 1x2

④: Handling Power
0.5 - 0.5W

⑤⑤⑤: Connector Type on Port 1, 2 &3
1A - FC/UPC
2A - FC/APC
3D - SC/UPC
4D - SC/APC
N - None
S - Specify

⑥⑥⑥: Fiber Jacket on Port 1, 2 &3
B - Bare Fiber
C - 900um Red Loose Tube
F - 900um White Loose Tube
S - Specify

⑦: Fiber Type on Port 1, 2&3
08 - Port 1, 2&3: PM1950
16 - Port 1&2: PM1950, Port 3: SM1950
20 - Port 1, 2&3: SM1950
46 - Port 1, 2&3: PM-GDF-10/130-2000
S - Specify

⑧: Axis Alignment on Port 3
1 - SM Fiber, Align to Port 1 &2 Slow Axis
2 - PM Fiber, Slow Axis Align 45° to Port 1
3 - PM Fiber, Slow Axis Align to Port 1
4 - All Ports are SM Fiber
S - Specify

⑨: Fiber Length
1 - 1.0m
S - Specify

⑩: Package Type
01 - Ø5.5×35
08 - 80×12×10
S - Specify

# High Power Polarization Beam Combiner/Splitter 19xxnm 10W

Spec No.: CAT-05-055C Date:

**Specifications**

| Parameter | Unit | Values | |
|---|---|---|---|
| Grade | - | Grade P | |
| Center Wavelength | nm | 2000 | |
| Operating Wavelength Range | nm | ±50 | |
| Typ. Insertion Loss(Excess Loss) | dB | 0.8 | 1.0 |
| Max. Insertion Loss(Excess Loss) | dB | 1.0 | 1.3 |
| Min. Return Loss | dB | 50 | |
| Min. Extinction Ratio (for Splitter only) | dB | 20 | |
| Min. Directivity | dB | 50 | |
| Max. Optical Power (CW) | W | 1, 3, 5 or Specify | |
| Max. Tensile Load | N | 5 | |
| Fiber Type | - | PM 1550 Panda Fiber on Port 1 and 2 | PM 1950 Panda Fiber on Port 1 and 2 |
| Operating Temperature | ℃ | -5 to + 70 | |
| Storage Temperature | ℃ | -40 to +85 | |

*Above specifications are for device without connector.

*For devices with connectors, IL will be 0.3dB higher, RL will be 5dB lower, ER will be 2dB lower, optical power is only 1W.

*The PM fiber and the connector key are aligned to the slow axis.

*The material must be RoHS compliant.

**Package Dimensions**

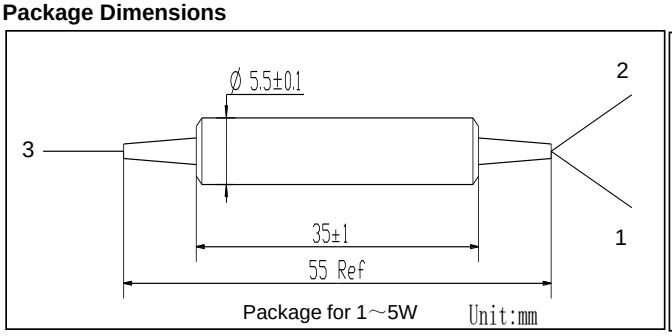


Package for 1～5W

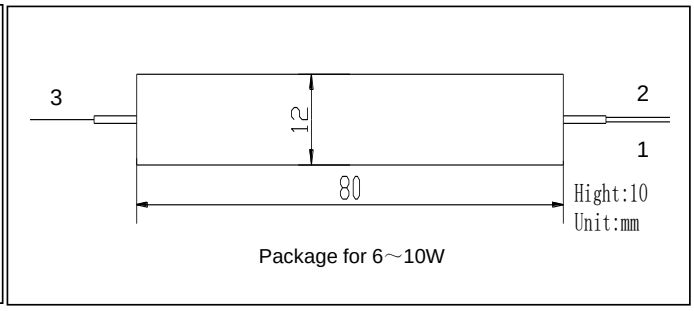


Package for 6～10W

**Ordering Information**

**HPBC-**①①①①-②-③-④④-⑤⑤⑤-⑥⑥⑥-⑦-⑧-⑨-⑩

**HPBS-**①①①①-②-③-④④-⑤⑤⑤-⑥⑥⑥-⑦-⑧-⑨-⑩

①①①①: Wavelength
2000 - 2000nm
S - Specify

②: Grade
P - Premium

③: Port
1 - 1x2

④④: Handling Power
01 - 1W
SS - Specify

⑤⑤⑤: Connector Type on Port 1, 2 &3
1A - FC/UPC
2A - FC/APC
3D - SC/UPC
4D - SC/APC
N - None
S - Specify

⑥⑥⑥: Fiber Jacket on Port 1, 2 &3
B - Bare Fiber
C - 900um Red Loose Tube
F - 900um White Loose Tube
S - Specify

⑦: Fiber Type on Port 1, 2&3
08 - Port 1, 2&3: PM1950
16 - Port 1&2: PM1950, Port 3: SM1950
20 - Port 1, 2&3: SM1950
46 - Port 1, 2&3: PM-GDF-10/130-2000
S - Specify

⑧: Axis Alignment on Port 3
1 - SM Fiber, Align to Port 1 &2 Slow Axis
2 - PM Fiber, Slow Axis Align 45° to Port 1
3 - PM Fiber, Slow Axis Align to Port 1
4 - All Ports are SM Fiber
S - Specify

⑨: Fiber Length
1 - 1.0m
S - Specify

⑩: Package Type
01 - Ø5.5×35
08 - 80×12×10
S - Specify

# Polarization Maintaining Mini Type Manual Variable Optical Attenuator 10xx~19xxnm 300mW~1W

Spec No.: CAT-09-045D Date:

**Specifications**

| Parameters | Unit | Values | | | | | | | | |
|---|---|---|---|---|---|---|---|---|---|---|
| Center Wavelength | nm | 532 | 630 | 780 | 850 | 980 | 1064 | 1310 | 1550 | 2000 |
| Operating Wavelength Range | nm | ±30 | | | | | | | | |
| Max. Excess Loss | dB | 2 | 1.6 | 0.8 | 0.7 | 0.6 | 0.6 | 0.6 | 0.6 | 0.8 |
| Min. ER at 23℃，Minimum Attenuation | dB | 18 | 18 | 18 | 18 | 20 | 20 | 20 | 20 | 18 |
| Max. Attenuation Range | dB | 50 (By Screw), 60 (By Hand) | | | | | | | | |
| Resolution Below 10dB Attenuation Range | dB | 0.1 | | | | | | | | |
| Min. Return Loss | dB | 50 | | | | | | | | |
| Fiber Type | - | PM Panda Fiber | | | | | | | | |
| Max. Tensile Load | N | 5 | | | | | | | | |
| Max. Optical Power(CW) | mW | 100 | 100 | 200 | 200 | 300 | 300 | 500 | 500 | 500 |
| Operating Temperature | ℃ | 0 to 70 (No Condensing) | | | | | | | | |
| Storage Temperature | ℃ | -40 to +85 (No Condensing) | | | | | | | | |

* Above specifications are for device without connector.
* For devices with connectors, IL will be 0.3dB higher (780&850nm: 0.5dB higher; 532&630nm: 1.5dB higher), RL will be 5dB lower,and ER is 2dB lower .
* The PM fiber and the connector key are aligned to the slow axis.
* The material must be RoHS compliant.

**Package Dimensions**

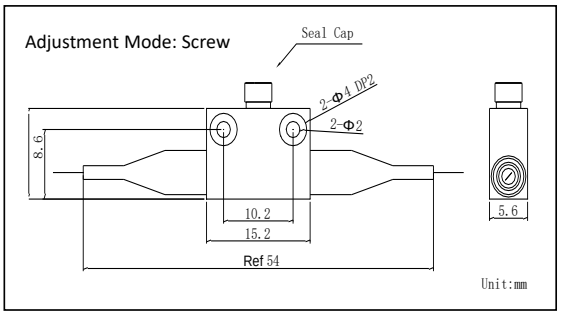


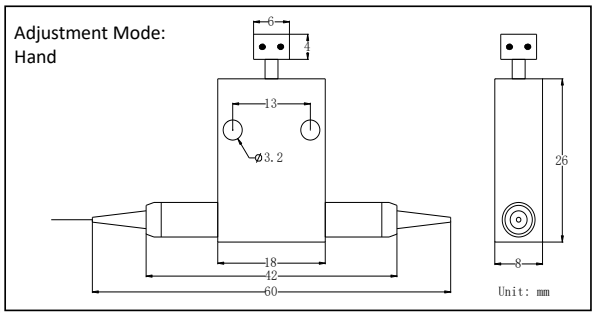


**Ordering Information**

**PMVOA**-①①-②②-③③-④④-⑤-⑥

①①: Wavelength
532 - 532nm
63 - 630nm
78 - 780nm
85 - 850nm
98 - 980nm
06 - 1064nm
31 - 1310nm
55 - 1550nm
20 - 2000nm
SS - Specify

②②: Adjustment Mode
S2 - By Screw
H2 - By Hand

③③: Connector Type
1A- FC/UPC
2A - FC/APC
3D - SC/UPC
4D - SC/APC
N - None
SS - Specify

④④: Fiber Jacket
B - Bare Fiber
C - 900um Losse tube (Red)
D - 900um Losse tube (Blue)
E - 900um Losse tube (Black)
R - 3mm Cable (Blue)
S - Specify

⑤: Fiber Type
1C - PM1950 Fiber
2A - PM1550 Fiber
3A - PM1310 Fiber
4A - PM980 Fiber
5A - PM850 Fiber
6C - PM780 Fiber
7C - PM630 Fiber
8C - PM460 Fiber
9C - PM1060L Fiber
SS - Specify

⑥: Fiber Length
0.8 - 0.8m
S - Specify

# Mini Type Manual Variable Optical Attenuator 10xx~19xxnm 300mW~1W

Spec No.: CAT-10-026D Date:

## Specifications

| Parameters | Unit | Values | | | | | | | |
|---|---|---|---|---|---|---|---|---|---|
| Center Wavelength | nm | 630 | 780 | 850 | 980 | 1064 | 1310 | 1550 | 2000 |
| Operating Wavelength Range | nm | ±30 | | | | | | | |
| Max. Excess Loss | dB | 1.6 | 0.8 | 0.7 | 0.6 | 0.6 | 0.6 | 0.6 | 0.7 |
| Max. Attenuation Range | dB | 50 (By Screw), 60 (By Hand) | | | | | | | |
| Max. PDL at 23℃，Minimum Attenuation | dB | 0.1 | | | | | | | |
| Resolution Below 10dB Attenuation Range | dB | 0.1 | | | | | | | |
| Min. Return Loss | dB | 50 | | | | | | | |
| Fiber Type | - | Singlemode Fiber | | | | | | | |
| Max. Tensile Load | N | 5 | | | | | | | |
| Max. Optical Power(CW) | mW | 100 | 200 | 200 | 300 | 300 | 500 | 500 | 500 |
| Operating Temperature | ℃ | 0 to 70 (No Condensing) | | | | | | | |
| Storage Temperature | ℃ | -40 to +85 (No Condensing) | | | | | | | |

* Above specifications are for device without connector.
* For devices with connectors, IL will be 0.3dB higher (<850nm: 0.5dB higher), RL will be 5dB lower.
* The material must be RoHS compliant.

## Package Dimensions

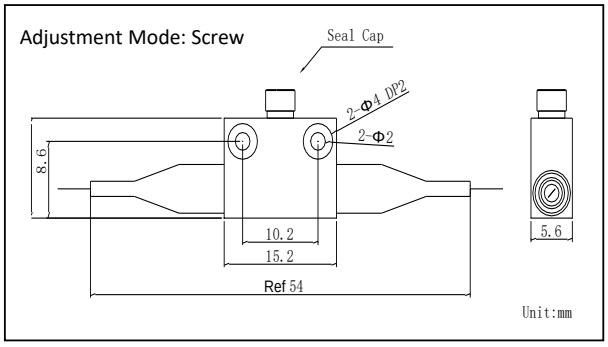


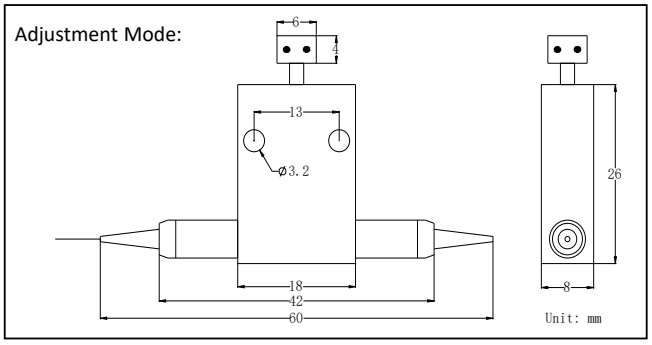


## Ordering Information

**MVOA**-①①-②②-③③-④④-⑤-⑥

①①: Wavelength
- 63 - 630nm
- 78 - 780nm
- 85 - 850nm
- 98 - 980nm
- 06 - 1064nm
- 31 - 1310nm
- 55 - 1550nm
- 20 - 2000nm
- SS - Specify

②②: Adjustment Mode
- S2 - By Screw
- H2 - By Hand

③③: Connector Type
- 1A- FC/UPC
- 2A - FC/APC
- 3D - SC/UPC
- 4D - SC/APC
- N - None
- S - Specify

④④: Fiber Jacket
- B - Bare Fiber
- E - 900um Losse tube (Black)
- F - 900um Losse tube (White)
- R - 3mm Cable (Blue)
- S - Specify

⑤: Fiber Type
- W – Nufern 630-HP Fiber
- B - HI 780 Fiber
- H - HI 1060 Fiber
- F - SMF-28e Fiber
- J - Nufern 780 HP Fiber
- A2 - SM1950 Fiber
- SS - Specify

⑥: Fiber Length
- 0.8 - 0.8m
- S - Specify

# Polarization Maintaining Faraday Mirror 10xxnm 300mW

Spec No.: CAT-09-022B Date:

**Specifications**

| Parameters | Unit | Values |
|---|---|---|
| Center Wavelength | nm | 1064 |
| Operating Wavelength Range | nm | ±5 |
| Typ. Insertion Loss | dB | 2.6 |
| Max. Insertion Loss | dB | 3.0 |
| Min.Extinction Ratio | dB | 20 |
| Faraday Rotation Angle (Single Pass) | deg | 45 |
| Max. Rotation Angle Tolerance at 23℃ | deg | ±3 |
| Max.Optical Power (CW) | mW | 150 |
| Max. Tensile Load | N | 5 |
| Fiber Type | | PM 980 Panda Fiber |
| Operating Temperature | ℃ | -5 to +50 |
| Storage Temperature | ℃ | -40 to +85 |

*Above specifications are for device without connector.

*For devices with connectors, IL will be 0.5dB higher, ER will be 2dB lower.

*The material must be RoHS compliant.

**Package Dimensions**

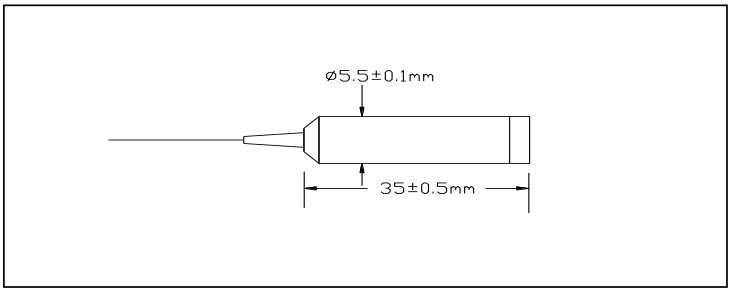


**Ordering Information**

**PMFM-** ①①-②-③-④-⑤-⑥⑥-⑦⑦

①①: Wavelength
06 - 1064nm
SS - Specify

②: Handing Power
0.15 - 150mW
S - Specify

③: Connector Type
1A - FC/UPC
2A - FC/APC
3A - SC/UPC
4A - SC/APC
N - None

④: Fiber Jacket
B - 250um Bare Fiber
C - 900um Loose Tube(Red)
D - 900um Loose Tube(Blue )
E - 900um Loose Tube(Black )
S - Specify

⑤: Fiber Length
0.8 - 0.8 m
S - Specify

⑥⑥:Fiber Type
02A - PM980 Fiber

⑦⑦: Package Type
01 - Ø5.5x35

# Faraday Mirror 10xxnm 300mW

**Spec No.: CAT-10-003B** **Date:**

**Specifications**

| Parameters | Unit | Values |
|---|---|---|
| Center Wavelength (λc) | nm | 1064 |
| Operating Wavelength Range | nm | ±5 |
| Max. Insertion Loss | dB | 3 |
| Faraday Rotation Angle (Single Pass) | deg | 45 |
| Max. Rotation Angle Tolerance at 23°C, λc | deg | ±3 |
| Max. PDL | dB | 0.05 |
| Max. Optical Power (CW) | mW | 150 |
| Max. Tensile Load | N | 5 |
| Fiber Type | -- | HI 1060 Fiber |
| Operating Temperature | ℃ | -5 to +50 |
| Storage Temperature | ℃ | -40 to +85 |

*Above specifications are for device without connector.

*For devices with connectors, IL will be 0.5dB higher.

*The material must be RoHS compliant.

**Package Dimensions**

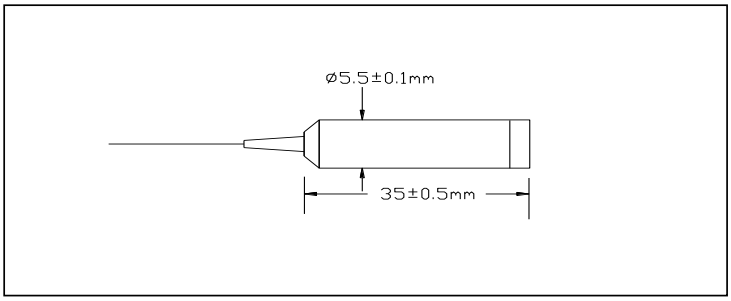


**Ordering Information**

**FM-**①①-②-③-④-⑤-⑥⑥-⑦⑦

①①: Wavelength
06 - 1064nm
SS - Specify

②: Handing Power
0.15 - 150mW
S - Specify

③: Connector Type
1A - FC/UPC
2A - FC/APC
3A - SC/UPC
4A - SC/APC
N - None

④: Fiber Jacket
B - 250um Bare Fiber
F - 900um Loose Tube(White)
G - 900um Loose Tube(Yellow)
E - 900um Loose Tube(Black)
S - Specify

⑤: Fiber Length
0.8 - 0.8 m
S - Specify

⑥⑥:Fiber Type
01 - HI-1060 Fiber

⑦⑦: Package Type
01 - Ø5.5x35

# Polarization Maintaining Faraday Mirror 15xxnm 300mW

Spec No.:CAT-09-023B Date:

**Specifications**

| Parameters | Unit | Values |
|---|---|---|
| Center Wavelength | nm | 1310, 1480 or 1550 |
| Operating Wavelength Range | nm | ±30 |
| Typ. Insertion Loss | dB | 0.4 |
| Max. Insertion Loss | dB | 0.6 |
| Faraday Rotation Angle (Single Pass) | deg | 45 |
| Max. Rotation Angle Tolerance at 23℃, CWL | deg | ±1 |
| Min. Extinction Ratio | dB | 20 |
| Max. Optical Power (CW) | mW | 500 |
| Max. Tensile Load | N | 5 |
| Fiber Type | -- | PM Panda Fiber |
| Operating Temperature | ℃ | -5 to +70 |
| Storage Temperature | ℃ | -40 to +85 |

*Above specifications are for device without connector.

*For devices with connectors, IL will be 0.3dB higher, ER will be 2dB lower.

*The material must be RoHS compliant.

**Package Dimensions**

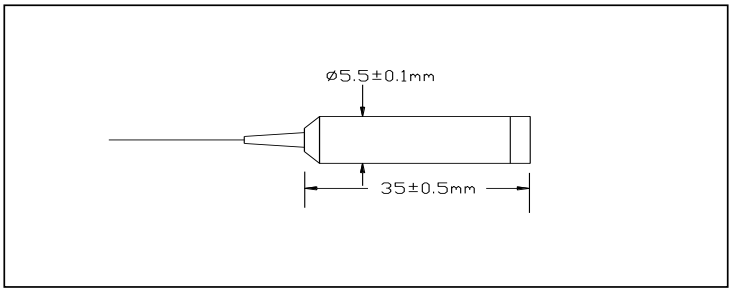


**Ordering Information**

**PMFM-** ①①-②-③-④-⑤-⑥⑥-⑦⑦

①①: Wavelength
31 - 1310nm
48 - 1480nm
55 - 1550nm
S - Specify

②: Handing Power
0.5 - 500mW
S - Specify

③: Connector Type
1A - FC/UPC
2A - FC/APC
3A - SC/UPC
4A - SC/APC
N - None

④: Fiber Jacket
B - 250um Bare Fiber
C - 900um Loose Tube(Red)
D - 900um Loose Tube(Blue )
E - 900um Loose Tube(Black )
S - Specify

⑤: Fiber Length
0.8 - 0.8 m
S - Specify

⑥⑥:Fiber Type
01A - PM1550 Fiber
03A - PM1300 Fiber

⑦⑦: Package Type
01 - Ø5.5x35

# Faraday Mirror 15xxnm 300mW

Spec No.: CAT-10-004B Date:

**Specifications**

| Parameters | Unit | Values |
|---|---|---|
| Center Wavelength (λc) | nm | 1310, 1480 or 1550 |
| Operating Wavelength Range | nm | ±15 |
| Typ. Insertion Loss | dB | 0.4 |
| Max. Insertion Loss | dB | 0.6 |
| Faraday Rotation Angle (Single Pass) | deg | 45 |
| Max. Rotation Angle Tolerance at 23°C, λc | deg | ±1 |
| Max. PDL | dB | 0.05 |
| Max. PMD | ps | 0.05 |
| Max. Optical Power (CW) | mW | 500 |
| Max. Tensile Load | N | 5 |
| Fiber Type | | SMF-28e Fiber |
| Operating Temperature | ℃ | -5 to +70 |
| Storage Temperature | ℃ | -40 to +85 |

*Above specifications are for device without connector.

*For devices with connectors, IL will be 0.3dB higher and RL will be 5dB lower.

*The material must be RoHS compliant.

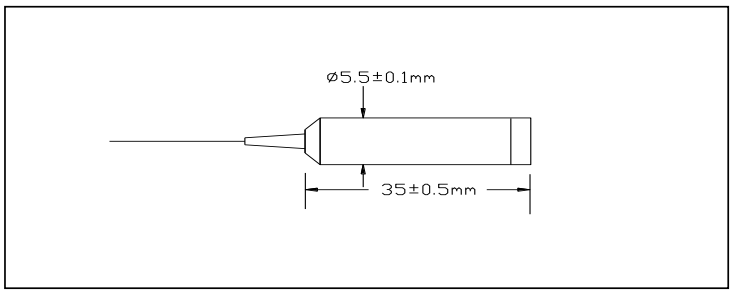


**Ordering Information**

**FM-** ①①-②-③-④-⑤-⑥⑥-⑦⑦

①①: Wavelength
31 - 1310nm
48 - 1480nm
55 - 1550nm
SS - Specify

②: Handing Power
0.5 - 500mW
S - Specify

③: Connector Type
1A - FC/UPC
2A - FC/APC
3A - SC/UPC
4A - SC/APC
N - None

④: Fiber Jacket
B - 250um Bare Fiber
F - 900um Loose Tube(White)
G - 900um Loose Tube(Yellow)
E - 900um Loose Tube(Black)
S - Specify

⑤: Fiber Length
0.8 - 0.8 m
S - Specify

⑥⑥:Fiber Type
02 - SMF-28e Fiber

⑦⑦: Package Type
01 - Ø5.5x35

# Polarization Maintaining Optical Fiber Mirror 10xxnm 300mW

Spec No.:CAT-09-034B Date:

**Specifications**

| Parameters | Unit | Values |
|---|---|---|
| Center Wavelength | nm | 1064 |
| Operating Wavelength Range | nm | ±30 |
| Typ. Insertion Loss | dB | 0.4 |
| Max. Insertion Loss | dB | 0.6 |
| Min. Extinction Ratio | dB | 22 |
| Max.Optical Power | mW | 300 |
| Max. Tensile Load | N | 5 |
| Fiber Type | -- | PM 980 Panda Fiber |
| Operating Temperature | ℃ | -5 to +70 |
| Storage Temperature | ℃ | -40 to +85 |

*Above specifications are for device without connector.

*For devices with connectors, IL will be 0.5dB higher and ER will be 2dB lower.

*The material must be RoHS compliant.

**Package Dimensions**

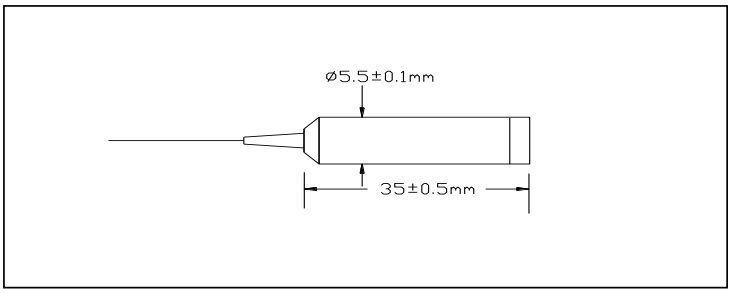


**Ordering Information**

**PMOFM-** ①①-②-③-④-⑤-⑥⑥-⑦⑦

①①: Wavelength
06 - 1064nm
SS - Specify

②: Handing Power
0.3 - 300mW
S - Specify

③: Connector Type
1A - FC/UPC
2A - FC/APC
3A - SC/UPC
4A - SC/APC
N - None

④: Fiber Jacket
B - 250um Bare Fiber
C - 900um Loose Tube(Red)
D - 900um Loose Tube(Blue )
E - 900um Loose Tube(Black
S - Specify

⑤: Fiber Length
0.8 - 0.8 m
S - Specify

⑥⑥:Fiber Type
02A - PM980 Fiber

⑦⑦: Package Type
01 - Ø5.5x35

# Optical Fiber Mirror 10xxnm 300mW

Spec No.: CAT-10-005B Date:

**Specifications**

| Parameters | Unit | Values |
|---|---|---|
| Center Wavelength | nm | 1064 |
| Operating Wavelength Range | nm | ±30 |
| Typ. Insertion Loss | dB | 0.4 |
| Max. Insertion Loss | dB | 0.6 |
| Max. PDL | dB | 0.05 |
| Max.Optical Power | mW | 300 |
| Max. Tensile Load | N | 5 |
| Fiber Type | -- | HI 1060 Fiber |
| Operating Temperature | ℃ | -5 to +70 |
| Storage Temperature | ℃ | -40 to +85 |

*Above specifications are for device without connector.

*For devices with connectors, IL will be 0.5dB higher.

*The material must be RoHS compliant.

**Package Dimensions**

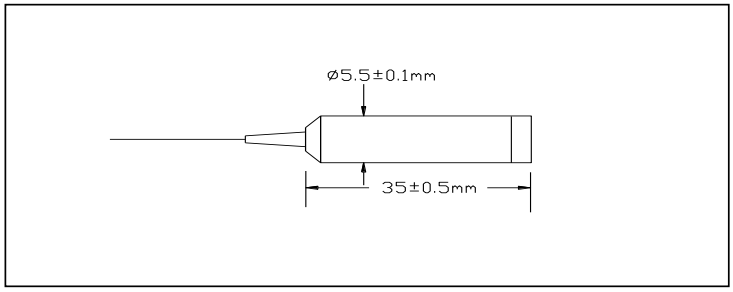


**Ordering Information**

**OFM-** ①①-②-③-④-⑤-⑥⑥-⑦⑦

①①: Wavelength
06 - 1064nm
SS - Specify

②: Handing Power
0.3 - 300mW
S - Specify

③: Connector Type
1A - FC/UPC
2A - FC/APC
3A - SC/UPC
4A - SC/APC
N - None

④: Fiber Jacket
B - 250um Bare Fiber
F - 900um Loose Tube(White)
G - 900um Loose Tube(Yellow
E - 900um Loose Tube(Black)
S - Specify

⑤: Fiber Length
0.8 - 0.8 m
S - Specify

⑥⑥:Fiber Type
01 - HI-1060 Fiber

⑦⑦: Package Type
01 - Ø5.5x35

# Polarization Maintaining Optical Fiber Mirror 15xxnm 300mW

Spec No.: CAT-09-033B Date:

**Specifications**

| Parameters | Unit | Values |
|---|---|---|
| Center Wavelength | nm | 1310, 1480 or 1550 |
| Operating Wavelength Range | nm | ±30 |
| Typ. Insertion Loss | dB | 0.3 |
| Max. Insertion Loss | dB | 0.5 |
| Min. Extinction Ratio | dB | 22 |
| Max.Optical Power | mW | 500 |
| Max. Tensile Load | N | 5 |
| Fiber Type | -- | PM Panda Fiber |
| Operating Temperature | ℃ | -5 to +70 |
| Storage Temperature | ℃ | -40 to +85 |

*Above specifications are for device without connector.

*For devices with connectors, IL will be 0.3dB higher and ER will be 2dB lower.

*The material must be RoHS compliant.

**Package Dimensions**

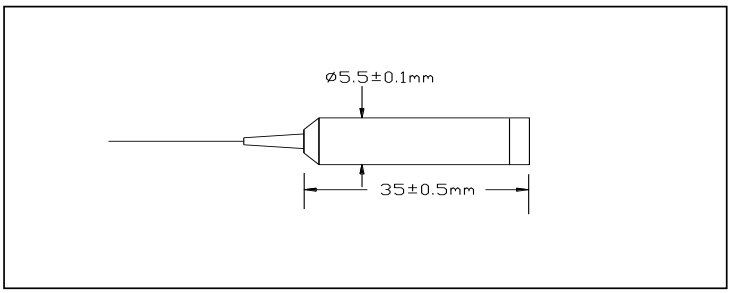


**Ordering Information**

**PMOFM-** ①①-②-③-④-⑤-⑥⑥-⑦⑦

①①: Wavelength
31 - 1310nm
48 - 1480nm
55 - 1550nm
S - Specify

②: Handing Power
0.5 - 500mW
S - Specify

③: Connector Type
1A - FC/UPC
2A - FC/APC
3A - SC/UPC
4A - SC/APC
N - None

④: Fiber Jacket
B - 250um Bare Fiber
C - 900um Loose Tube(Red)
D - 900um Loose Tube(Blue )
E - 900um Loose Tube(Black )
S - Specify

⑤: Fiber Length
0.8 - 0.8 m
S - Specify

⑥⑥:Fiber Type
01A - PM1550 Fiber
04A - PM1300 Fiber

⑦⑦: Package Type
01 - Ø5.5x35

# Optical Fiber Mirror 15xxnm 300mW

Spec No.: CAT-10-006B Date:

**Specifications**

| Parameters | Unit | Values |
|---|---|---|
| Center Wavelength | nm | 1310, 1480 or 1550 |
| Operating Wavelength Range | nm | ±30 |
| Typ. Insertion Loss | dB | 0.3 |
| Max. Insertion Loss | dB | 0.5 |
| Max. PDL | dB | 0.05 |
| Max. PMD | ps | 0.05 |
| Max.Optical Power | mW | 500 |
| Max. Tensile Load | N | 5 |
| Fiber Type | -- | SMF-28e Fiber |
| Operating Temperature | ℃ | -5 to +70 |
| Storage Temperature | ℃ | -40 to +85 |

*Above specifications are for device without connector.

*For devices with connectors, IL will be 0.3dB higher.

*The material must be RoHS compliant.

**Package Dimensions**

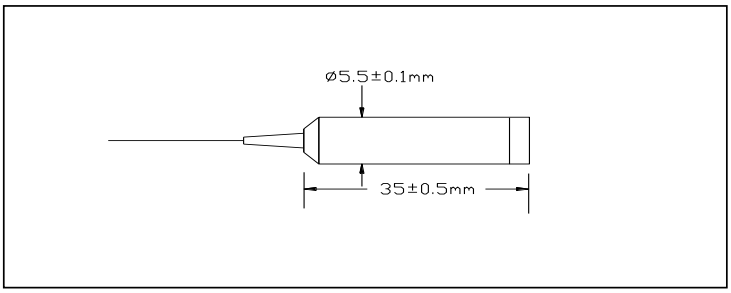


**Ordering Information**

**OFM-** ①①-②-③-④-⑤-⑥⑥-⑦⑦

①①: Wavelength
31 - 1310nm
48 - 1480nm
55 - 1550nm
SS - Specify

②: Handing Power
0.5 - 500mW
S - Specify

③: Connector Type
1A - FC/UPC
2A - FC/APC
3A - SC/UPC
4A - SC/APC
N - None

④: Fiber Jacket
B - 250um Bare Fiber
F - 900um Loose Tube(White)
G - 900um Loose Tube(Yellow)
E - 900um Loose Tube(Black)
S - Specify

⑤: Fiber Length
0.8 - 0.8 m
S - Specify

⑥⑥:Fiber Type
02 - SMF-28e Fiber

⑦⑦: Package Type
01 - Ø5.5x35

# Polarization Maintaining Fiber Patchcord 10xx~15xxnm 300mW

Spec No.: CAT-09-029D Date:

**Specifications**

| Parameters | Unit | Values | | | | | | | |
|---|---|---|---|---|---|---|---|---|---|
| Wavelength | nm | 405, 460, 532 | 630 | 780, 850 | | 980, 1064 | 1310 | 1550 | 2000 |
| Max. Insertion Loss | dB | 1.5 | 1.2 | 1.0 (for PM780-HP) | 0.7 (for PM850) | 0.6 | 0.5 | | 0.7 |
| Min. Extinction Ratio | dB | 18 | 20 | | 22 | 23 | | | 22 |
| Min. Return Loss | dB | 50 for UPC, 60 for APC | | | | | | | |
| Key Width (for FC Connector) | mm | 2.02 | | | | | | | |
| Max. Optical Power (CW) | mW | 100 | | | | 300 | | | |
| Max. Tensile Load | N | 5 | | | | | | | |
| Fiber Type | | PM Panda Fiber | | | | | | | |
| Fiber Length Tolerance | % | ± 10 or Specify | | | | | | | |
| Operating Temperature | ℃ | -5 ~ +70 | | | | | | | |
| Storage Temperature | ℃ | -40 ~ +85 | | | | | | | |

* The material must be RoHS compliant.

**Package Dimensions**

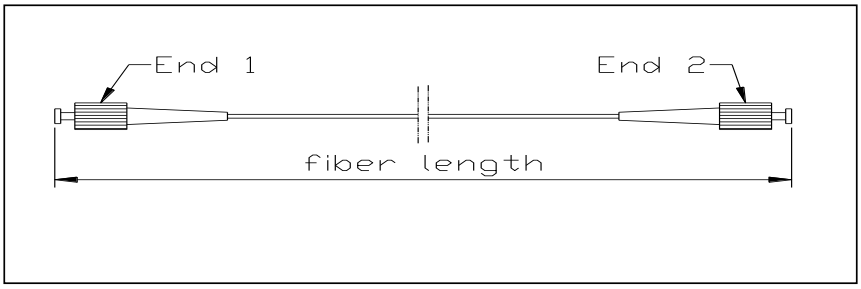


**Ordering Information**

**PMP**-①-②②-③③-④-⑤-⑥

①: Wavelength
55 - 1550nm
31 - 1310nm
06 - 1064nm
98 - 980nm
85 - 850nm
78 - 780nm
63 - 630nm
SS - Specify

②②: Key Orientation on End 1 & 2
1 - Slow Axis
2 - Fast Axis
N - None

③③: Connector Type on End 1 & 2
1B - FC/UPC
2B - FC/APC
3D - SC/UPC
4D - SC/APC
7B - LC/UPC
8B - LC/APC
N - None
SS - Specify

④: Fiber Jacket
B - Bare Fiber
C - 900um Loose Tube (Red)
R - 3mm Cable (Blue)
SS - Specify

⑤: Fiber Type
2B - PM1550 Fiber
3B - PM1310 Fiber
4B - PM980 Fiber
5B - PM850 Fiber
6C - PM780-HP Fiber
7C - PM630-HP Fiber
8C - PM460-HP Fiber
9C - PM-S405-XP Fiber
SS - Specify

⑥: Fiber Length
1A - 1.0m ± 10%
SS - Specify

# Patchcord 10xxnm~15xxnm 300mW

Spec No.: CAT-10-007C Date:

**Specifications**

| Parameters | Unit | Values | | | | | | |
|---|---|---|---|---|---|---|---|---|
| Wavelength | nm | 405, 460, 532 | 630 | 780, 850 | | 980, 1064 | 1310, 1550 | 2000 |
| Max. Insertion Loss | dB | 1.5 | 1.2 | 1.0 (for 780-HP) | 0.7 (for Hi780) | 0.6 | 0.5 | 0.7 |
| Min. Return Loss | dB | 50 for UPC, 60 for APC | | | | | | |
| Key Width (for FC Connector) | mm | 2.02 | | | | | | |
| Max. Optical Power (CW) | mW | 100 | | | | 300 | | |
| Max. Tensile Load | N | 5 | | | | | | |
| Fiber Length Tolerance | % | ± 10% or Specify | | | | | | |
| Operating Temperature | ℃ | -5 to +70 | | | | | | |
| Storage Temperature | ℃ | -40 to +85 | | | | | | |

* The material must be RoHS compliant.

**Package Dimensions**

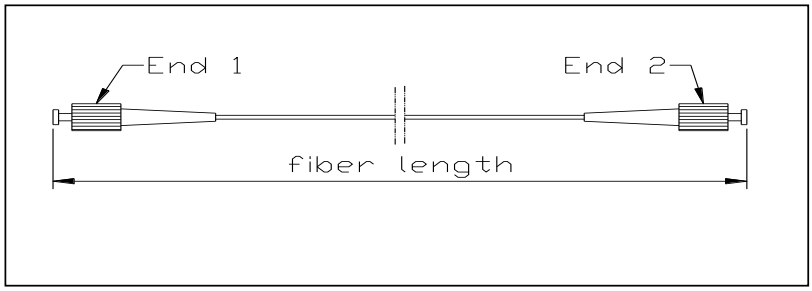


**Ordering Information**

**P**-①-②②-③-④-⑤

①: Wavelength
55 - 1550nm
31 - 1310nm
06 - 1064nm
98 - 980nm
85 - 850nm
78 - 780nm
SS - Specify

②②: Connector Type on End 1 & 2
1A - FC/UPC
2A - FC/APC
3D - SC/UPC
4D - SC/APC
7B - LC/UPC
8B - LC/APC
N - None
SS - Specify

③: Fiber Jacket Type
B - Bare Fiber
F - 900um Loose Tube(White)
T - 3mm Cable(Yellow)
V - 3mm Armoured Cable(Black)
SS - Specify

④: Fiber Type
B - HI 780 Fiber
F - SMF-28e Fiber
H - HI 1060 Fiber
J - Nufern 780-HP Fiber
W – Nufern 630-HP Fiber
Y – Nufern 405-HP Fiber
A2 - SM1950 Fiber
A6 - Nufern 460-HP Fiber
SS - Specify

⑤: Fiber Length
1A - 1.0m ± 10%
SS - Specify

# Polarization Maintaining Fiber Patchcord 9xx~15xxnm 300mW

Spec No.: CAT-09-029D

Date:

**Specifications**

| Parameters | Unit | Values | | | | | | | |
|---|---|---|---|---|---|---|---|---|---|
| Wavelength | nm | 405, 460, 532 | 630 | 780, 850 | | 980, 1064 | 1310 | 1550 | 2000 |
| Max. Insertion Loss | dB | 1.5 | 1.2 | 1.0 (for PM780-HP) | 0.7 (for PM850) | 0.6 | 0.5 | | 0.7 |
| Min. Extinction Ratio | dB | 18 | 20 | | 22 | 23 | | | 22 |
| Min. Return Loss | dB | 50 for UPC, 60 for APC | | | | | | | |
| Key Width (for FC Connector) | mm | 2.02 | | | | | | | |
| Max. Optical Power (CW) | mW | 100 | | | | 300 | | | |
| Max. Tensile Load | N | 5 | | | | | | | |
| Fiber Type | | PM Panda Fiber | | | | | | | |
| Fiber Length Tolerance | % | ± 10 or Specify | | | | | | | |
| Operating Temperature | ℃ | -5 ~ +70 | | | | | | | |
| Storage Temperature | ℃ | -40 ~ +85 | | | | | | | |

* The material must be RoHS compliant.

**Package Dimensions**

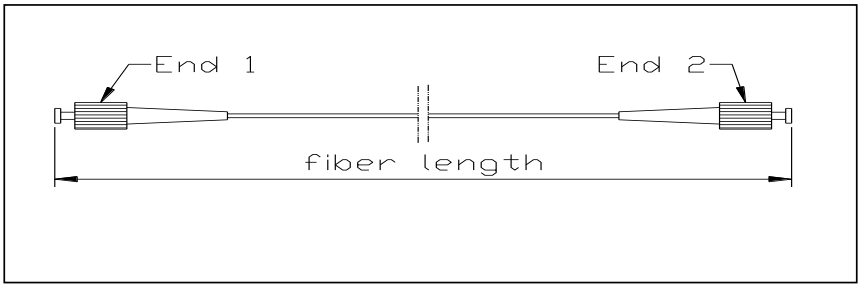


**Ordering Information**

**PMP**-①-②②-③③-④-⑤-⑥

①: Wavelength
55 - 1550nm
31 - 1310nm
06 - 1064nm
98 - 980nm
85 - 850nm
78 - 780nm
63 - 630nm
SS - Specify

②②: Key Orientation on End 1 & 2
1 - Slow Axis
2 - Fast Axis
N - None

③③: Connector Type on End 1 & 2
1B - FC/UPC
2B - FC/APC
3D - SC/UPC
4D - SC/APC
7B - LC/UPC
8B - LC/APC
N - None
SS - Specify

④: Fiber Jacket
B - Bare Fiber
C - 900um Loose Tube (Red)
R - 3mm Cable (Blue)
SS - Specify

⑤: Fiber Type
2B - PM1550 Fiber
3B - PM1310 Fiber
4B - PM980 Fiber
5B - PM850 Fiber
6C - PM780-HP Fiber
7C - PM630-HP Fiber
8C - PM460-HP Fiber
9C - PM-S405-XP Fiber
SS - Specify

⑥: Fiber Length
1A - 1.0m ± 10%
SS - Specify

# Patchcord 9xx~15xxnm 300mW

Spec No.: CAT-10-007C Date:

**Specifications**

| Parameters | Unit | Values | | | | | | |
|---|---|---|---|---|---|---|---|---|
| Wavelength | nm | 405, 460, 532 | 630 | 780, 850 | | 980, 1064 | 1310, 1550 | 2000 |
| Max. Insertion Loss | dB | 1.5 | 1.2 | 1.0 (for 780-HP) | 0.7 (for Hi780) | 0.6 | 0.5 | 0.7 |
| Min. Return Loss | dB | 50 for UPC, 60 for APC | | | | | | |
| Key Width (for FC Connector) | mm | 2.02 | | | | | | |
| Max. Optical Power (CW) | mW | 100 | | | | 300 | | |
| Max. Tensile Load | N | 5 | | | | | | |
| Fiber Length Tolerance | % | ± 10% or Specify | | | | | | |
| Operating Temperature | ℃ | -5 to +70 | | | | | | |
| Storage Temperature | ℃ | -40 to +85 | | | | | | |

* The material must be RoHS compliant.

**Package Dimensions**

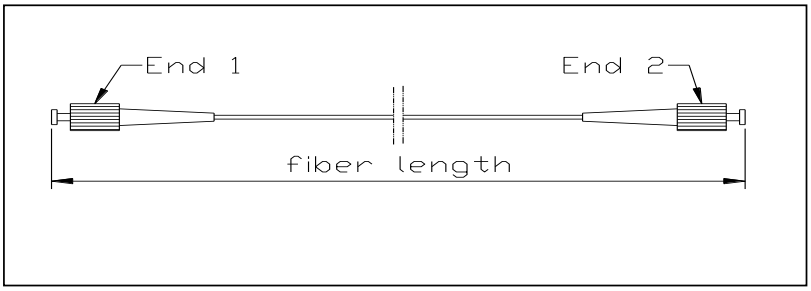


**Ordering Information**

**P**-①-②②-③-④-⑤

①: Wavelength
55 - 1550nm
31 - 1310nm
06 - 1064nm
98 - 980nm
85 - 850nm
78 - 780nm
SS - Specify

②②: Connector Type on End 1 & 2
1A - FC/UPC
2A - FC/APC
3D - SC/UPC
4D - SC/APC
7B - LC/UPC
8B - LC/APC
N - None
SS - Specify

③: Fiber Jacket Type
B - Bare Fiber
F - 900um Loose Tube(White)
T - 3mm Cable(Yellow)
V - 3mm Armoured Cable(Black)
SS - Specify

④: Fiber Type
B - HI 780 Fiber
F - SMF-28e Fiber
H - HI 1060 Fiber
J - Nufern 780-HP Fiber
W – Nufern 630-HP Fiber
Y – Nufern 405-HP Fiber
A2 - SM1950 Fiber
A6 - Nufern 460-HP Fiber
SS - Specify

⑤: Fiber Length
1A - 1.0m ± 10%
SS - Specify

# Polarization Maintaining Fiber Patchcord 9xx~15xxnm 300mW

Spec No.: CAT-09-029D

Date:

**Specifications**

| Parameters | Unit | Values | | | | | | | |
|---|---|---|---|---|---|---|---|---|---|
| Wavelength | nm | 405, 460, 532 | 630 | 780, 850 | | 980, 1064 | 1310 | 1550 | 2000 |
| Max. Insertion Loss | dB | 1.5 | 1.2 | 1.0 (for PM780-HP) | 0.7 (for PM850) | 0.6 | 0.5 | | 0.7 |
| Min. Extinction Ratio | dB | 18 | 20 | | 22 | 23 | | | 22 |
| Min. Return Loss | dB | 50 for UPC, 60 for APC | | | | | | | |
| Key Width (for FC Connector) | mm | 2.02 | | | | | | | |
| Max. Optical Power (CW) | mW | 100 | | | | 300 | | | |
| Max. Tensile Load | N | 5 | | | | | | | |
| Fiber Type | | PM Panda Fiber | | | | | | | |
| Fiber Length Tolerance | % | ± 10 or Specify | | | | | | | |
| Operating Temperature | ℃ | -5 ~ +70 | | | | | | | |
| Storage Temperature | ℃ | -40 ~ +85 | | | | | | | |

* The material must be RoHS compliant.

**Package Dimensions**

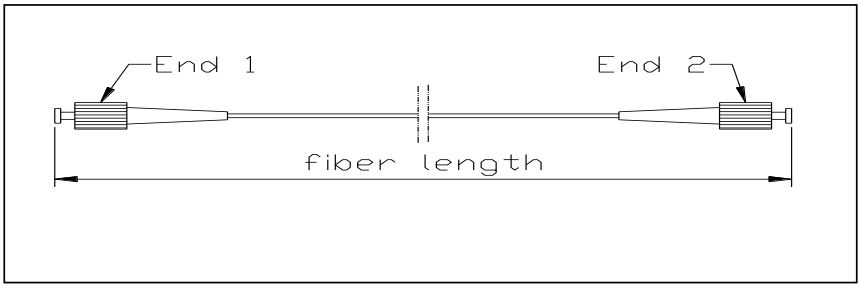


**Ordering Information**

**PMP**-①-②②-③③-④-⑤-⑥

①: Wavelength
55 - 1550nm
31 - 1310nm
06 - 1064nm
98 - 980nm
85 - 850nm
78 - 780nm
63 - 630nm
SS - Specify

②②: Key Orientation on End 1 & 2
1 - Slow Axis
2 - Fast Axis
N - None

③③: Connector Type on End 1 & 2
1B - FC/UPC
2B - FC/APC
3D - SC/UPC
4D - SC/APC
7B - LC/UPC
8B - LC/APC
N - None
SS - Specify

④: Fiber Jacket
B - Bare Fiber
C - 900um Loose Tube (Red)
R - 3mm Cable (Blue)
SS - Specify

⑤: Fiber Type
2B - PM1550 Fiber
3B - PM1310 Fiber
4B - PM980 Fiber
5B - PM850 Fiber
6C - PM780-HP Fiber
7C - PM630-HP Fiber
8C - PM460-HP Fiber
9C - PM-S405-XP Fiber
SS - Specify

⑥: Fiber Length
1A - 1.0m ± 10%
SS - Specify

# Patchcord 9xx~15xxnm 300mW

Spec No.: CAT-10-007C Date:

**Specifications**

| Parameters | Unit | Values | | | | | | |
|---|---|---|---|---|---|---|---|---|
| Wavelength | nm | 405, 460, 532 | 630 | 780, 850 | | 980, 1064 | 1310, 1550 | 2000 |
| Max. Insertion Loss | dB | 1.5 | 1.2 | 1.0 (for 780-HP) | 0.7 (for Hi780) | 0.6 | 0.5 | 0.7 |
| Min. Return Loss | dB | 50 for UPC, 60 for APC | | | | | | |
| Key Width (for FC Connector) | mm | 2.02 | | | | | | |
| Max. Optical Power (CW) | mW | 100 | | | | 300 | | |
| Max. Tensile Load | N | 5 | | | | | | |
| Fiber Length Tolerance | % | ± 10% or Specify | | | | | | |
| Operating Temperature | ℃ | -5 to +70 | | | | | | |
| Storage Temperature | ℃ | -40 to +85 | | | | | | |

* The material must be RoHS compliant.

**Package Dimensions**

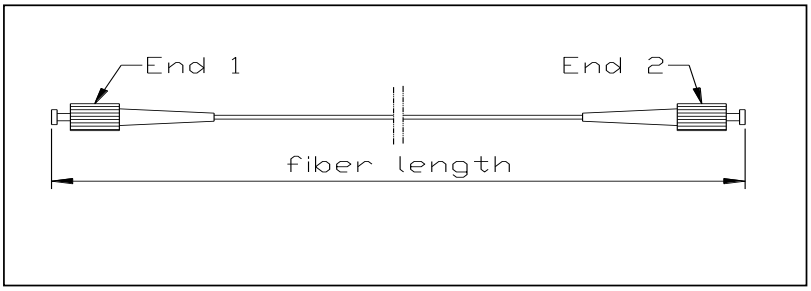


**Ordering Information**

**P**-①-②②-③-④-⑤

①: Wavelength
55 - 1550nm
31 - 1310nm
06 - 1064nm
98 - 980nm
85 - 850nm
78 - 780nm
SS - Specify

②②: Connector Type on End 1 & 2
1A - FC/UPC
2A - FC/APC
3D - SC/UPC
4D - SC/APC
7B - LC/UPC
8B - LC/APC
N - None
SS - Specify

③: Fiber Jacket Type
B - Bare Fiber
F - 900um Loose Tube(White)
T - 3mm Cable(Yellow)
V - 3mm Armoured Cable(Black)
SS - Specify

④: Fiber Type
B - HI 780 Fiber
F - SMF-28e Fiber
H - HI 1060 Fiber
J - Nufern 780-HP Fiber
W – Nufern 630-HP Fiber
Y – Nufern 405-HP Fiber
A2 - SM1950 Fiber
A6 - Nufern 460-HP Fiber
SS - Specify

⑤: Fiber Length
1A - 1.0m ± 10%
SS - Specify

# Mini Variable Optical Delay Line 10xxnm 300mW~5W

Spec No.: CAT-10-031B Date:

## Specifications

| Parameters | | Unit | Values | |
|---|---|---|---|---|
| Center Wavelength | | nm | 630, 850 | 1064, 1310 or 1550 |
| Operating Wavelength Range | | nm | ±40 | |
| Optical Delay Range | | ps | 0 ~ 530 | |
| Zero Point Delay Offset** | | ps | ~ 280 | |
| Readout Scale Resolution | | mm | 0.5*4 | |
| Max. Insertion Loss @λc | | dB | 1.7 | 1.5 |
| Max. Insertion Loss Variation | | dB | 0.9 | 0.6 |
| Min. Extinction Ratio (Only for PM Fiber) | | dB | 18 | 20 |
| Max. PDL (Only for SM Fiber) | | dB | 0.15 | 0.1 |
| Min. Return Loss | | dB | 50 | |
| Max. Optical Power (CW) | | mW | 300 | |
| Fiber Type | MVDL | - | SM Fiber | |
| | MPMVDL | - | PM Panda Fiber | |
| Operating Temperature | | ℃ | 0 to+40 (No Condensing) | |
| Storage Temperature | | ℃ | 0 to +85 (No Condensing) | |

*Above specifications are for device without connector.

*For devices with connectors, IL will be 0.3dB higher (0.5dB higher for 1064nm), ER will be 2dB lower, and RL will be 5dB lower.

*The PM fiber and the connector key are aligned to the slow axis.

**Absolute delay at 0ps setting measured to the edge of the enclosure (excluding caps, boots, and Pigtails).

## Package Dimensions

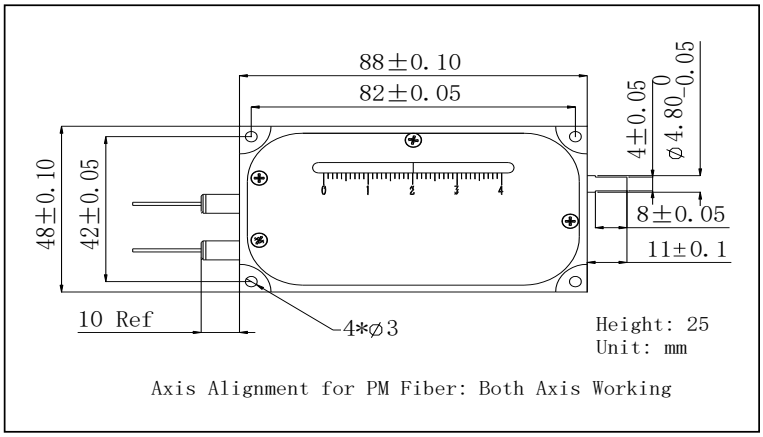


## Ordering Information

**MVDL**-①①-②②-③③-④−⑤

**MPMVDL**-①①-②②-③③-④−⑤

①①: Center Wavelength
63 - 630nm
85 - 850m
06 - 1064nm
31 - 1310m
55 - 1550nm
SS - Specify

②②: Connector Type
1A- FC/UPC
2A - FC/APC
3D - SC/UPC
4D - SC/APC
N - None
S - Specify

③③: Fiber Jacket Type
B - Bare Fiber
C - 900um Losse tube (Red)
F - 900um Losse tube (White)
S - Specify

④: Fiber Type
B - HI 780 Fiber
F - SMF-28e Fiber
H - HI 1060 Fiber
W – Nufern 630-HP Fiber
2A - PM1550 Fiber
3A - PM1310 Fiber
4A - PM980 Fiber
7C - PM630 Fiber
SS - Specify

⑤: Fiber Length
0.8 - 0.8m
S - Specify

# Mini Variable Optical Delay Line 15xxnm 300mW~5W

Spec No.: CAT-10-031B Date:

## Specifications

| Parameters | | Unit | Values | |
|---|---|---|---|---|
| Center Wavelength | | nm | 630, 850 | 1064, 1310 or 1550 |
| Operating Wavelength Range | | nm | ±40 | |
| Optical Delay Range | | ps | 0 ~ 530 | |
| Zero Point Delay Offset** | | ps | ~ 280 | |
| Readout Scale Resolution | | mm | 0.5*4 | |
| Max. Insertion Loss @λc | | dB | 1.7 | 1.5 |
| Max. Insertion Loss Variation | | dB | 0.9 | 0.6 |
| Min. Extinction Ratio (Only for PM Fiber) | | dB | 18 | 20 |
| Max. PDL (Only for SM Fiber) | | dB | 0.15 | 0.1 |
| Min. Return Loss | | dB | 50 | |
| Max. Optical Power (CW) | | mW | 300 | |
| Fiber Type | MVDL | - | SM Fiber | |
| | MPMVDL | - | PM Panda Fiber | |
| Operating Temperature | | ℃ | 0 to+40 (No Condensing) | |
| Storage Temperature | | ℃ | 0 to +85 (No Condensing) | |

*Above specifications are for device without connector.

*For devices with connectors, IL will be 0.3dB higher (0.5dB higher for 1064nm), ER will be 2dB lower, and RL will be 5dB lower.

*The PM fiber and the connector key are aligned to the slow axis.

**Absolute delay at 0ps setting measured to the edge of the enclosure (excluding caps, boots, and Pigtails).

## Package Dimensions

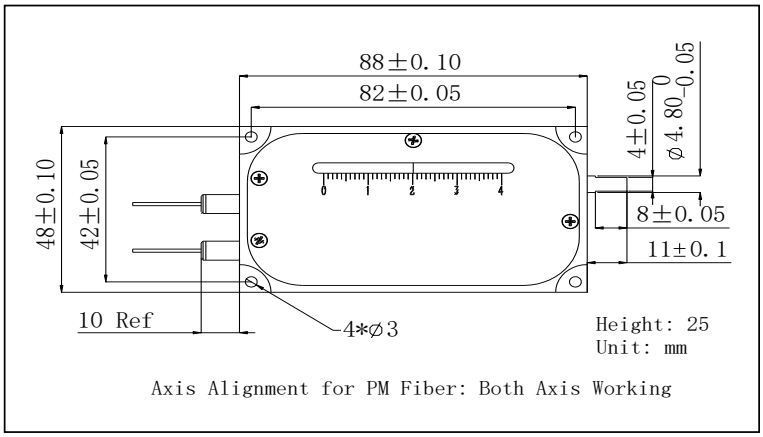


## Ordering Information

**MVDL**-①①-②②-③③-④−⑤

**MPMVDL**-①①-②②-③③-④−⑤

①①: Center Wavelength
- 63 - 630nm
- 85 - 850m
- 06 - 1064nm
- 31 - 1310m
- 55 - 1550nm
- SS - Specify

②②: Connector Type
- 1A- FC/UPC
- 2A - FC/APC
- 3D - SC/UPC
- 4D - SC/APC
- N - None
- S - Specify

③③: Fiber Jacket Type
- B - Bare Fiber
- C - 900um Losse tube (Red)
- F - 900um Losse tube (White)
- S - Specify

④: Fiber Type
- B - HI 780 Fiber
- F - SMF-28e Fiber
- H - HI 1060 Fiber
- W – Nufern 630-HP Fiber
- 2A - PM1550 Fiber
- 3A - PM1310 Fiber
- 4A - PM980 Fiber
- 7C - PM630 Fiber
- SS - Specify

⑤: Fiber Length
- 0.8 - 0.8m
- S - Specify

# Signal Receipt Module 8xxnm 300mW

Spec Evaluation No.:SE1906001D Date: Sep. 24, 2024

## Specifications

| Parameters | Unit | Values |
|---|---|---|
| Center Wavelength | nm | 850 |
| Operating Wavelength Range | nm | ±5 |
| Min. Contrast (1→2/4、1→3/5) @ 23℃ | dB | 27 |
| Max. IL (1→2/3/4/5) ,SOP | dB | 7.5 |
| Coaxiality | - | ⩾85% |
| Min. Return Loss (SM Fiber / MM Fiber) | dB | 50/30 |
| Max. Optical Power (CW) | mW | 500 |
| Max. Tensile Load | N | 5 |
| Fiber Type | - | Port 1: Nufern 780-HP Fiber ,Port 2/3/4/5: Nufern MultiMode Fiber 62.5/125 |
| Operating Temperature | ℃ | -5 to + 50 (No Condensing) |
| Storage Temperature | ℃ | -40 to +85 (No Condensing) |

*Above specifications are for device without connector.

*For devices with connectors, IL will be 0.2dB higher and RL will be 20dB lower for MM fiber, IL will be 0.5dB higher and RL will be 5dB lower for SM fiber.

*The material must be RoHS compliant.

## Package Dimensions

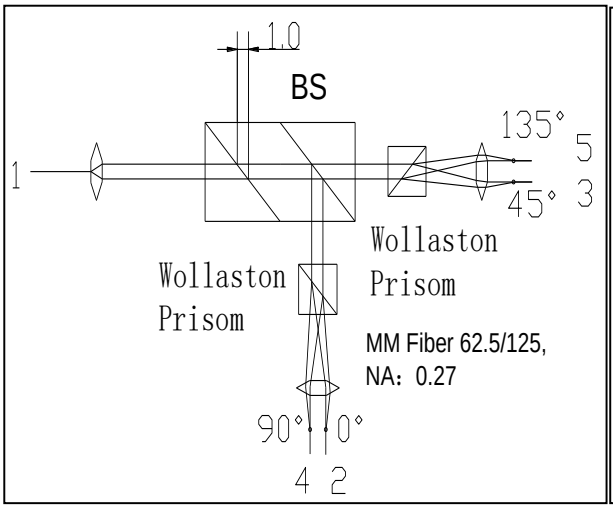


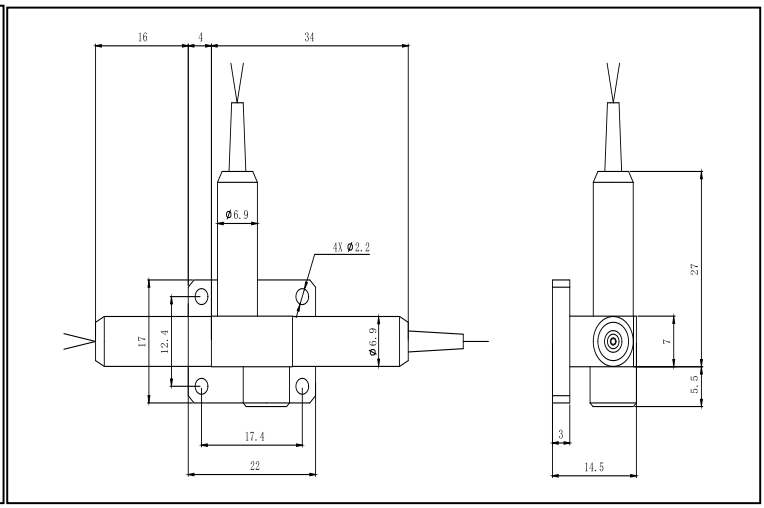


## Ordering Information

**SRM-**①①-②-③-④④④④④-⑤⑤⑤⑤⑤-⑥-⑦⑦

①①: Wavelength
85 - 850nm

②: Type
M - Type M

③:Handling Power
0.5 - 500mW

④④④④④: Connector Type on Port
1G - FC/UPC
2G - FC/APC (Step)
N - None
SSSSS - Specify

⑤⑤⑤⑤⑤: Fiber Jacket on Port
B - 250um Bare Fiber
E - 900um Loose Tube(Black)

⑥: Fiber Length
0.5 - 0.5m
S - Specify

⑦⑦: Fiber Type
04 - Nufern 780-HP for Port 1
others Nufern MultiMode 62.5/125

# Polarization Maintaining Filter Coupler with Polarization Beam Splitter Device 15xxnm 500mW

Spec Review No.: SR2312009A Date: Dec. 04, 2023

## Specifications

| Parameters | Unit | Values |
|---|---|---|
| Center Wavelength | nm | 1550 |
| Operating Wavelength Range | nm | ±30 |
| Max. Insertion Loss (In → 1 & 2, Proper SOP) | dB | 4.2 |
| Max. Insertion Loss (In → 3 & 4, Proper SOP) | dB | 4.2 |
| Max. Uniformity | dB | 0.3 |
| Min. Extinction Ratio | dB | 25 |
| Min. Return Loss | dB | 45 |
| Max. Optical Power (CW) | mW | 500 |
| Max. Tensile Load | N | 5 |
| Fiber Type | - | SM Fiber and PM Fiber |
| Operating Temperature | ℃ | -5 to +70 |
| Storage Temperature | ℃ | -40 to +85 |

*Above specifications are for devices without the connectors.

*For devices with connectors, IL will be 0.3dB higher, and ER will be 2dB lower, and RL will be 5dB lower.

*The PM fiber and the connector key are aligned to the slow axis.

*The material must be RoHS compliant.

## Package Dimensions

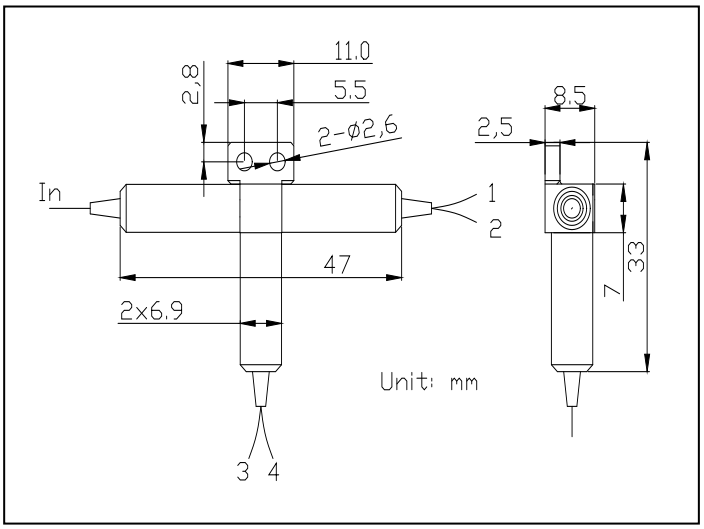


## Optical Path

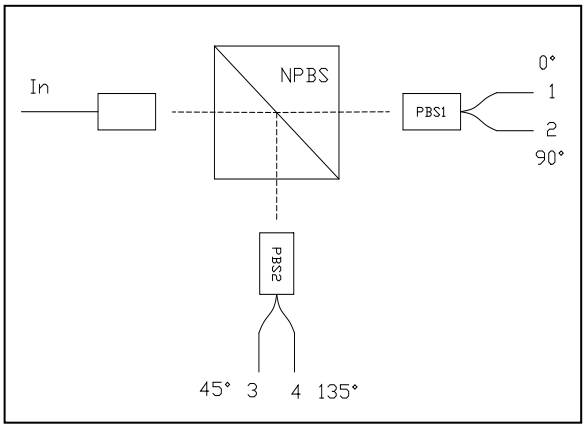


## Ordering Information

**PMFCPBS**-①①-②-③-④-⑤-⑥

①①: Wavelength
55 - 1550nm
SS - Specify

②: Port
5 - 5 Ports

③: Connector Type on all Ports
1A - FC/UPC
2A - FC/APC
S - Specify

④: Fiber Jacket on all Ports
C - 900um Losse Tube (Red, PM Fiber)
F - 900um Losse Tube (White, SM Fiber)
S - Specify

⑤: Fiber Type
F - SMF-28e Fiber (In Port)
2A - PM 1550 Fiber (1/2/3/4 Ports)
S - Specify

⑥: Fiber Length
0.8 - 0.8m
S - Specify

# Polarization Maintaining Filter Coupler Module 8xxnm 300mW

Spec Review No.: SR1707005B Date: May. 22, 2023

## Specifications

| Parameters | Unit | Values |
|---|---|---|
| Center Wavelength | nm | 780 or 850 |
| Operating Wavelength Range | nm | ±10 |
| Max. Insertion Loss | dB | 8.5 |
| Max. Uniformity | dB | 0.8 |
| Min. Extinction Ratio | dB | 21 |
| Min. Return Loss | dB | 50 |
| Max. Optical Power (CW, Total) | mW | 300 |
| Fiber Type | - | PM Panda Fiber |
| Operating Temperature | ℃ | -5 to+70 |
| Storage Temperature | ℃ | -40 to +85 |

*Above specifications are for module without connector.

*For modules with connectors, IL will be 0.5dB higher, RL will be 5dB lower and ER will be 2dB lower.

*The PM fiber and the connector key are aligned to the slow axis.

*The material must be RoHS compliant.

## Package Dimensions

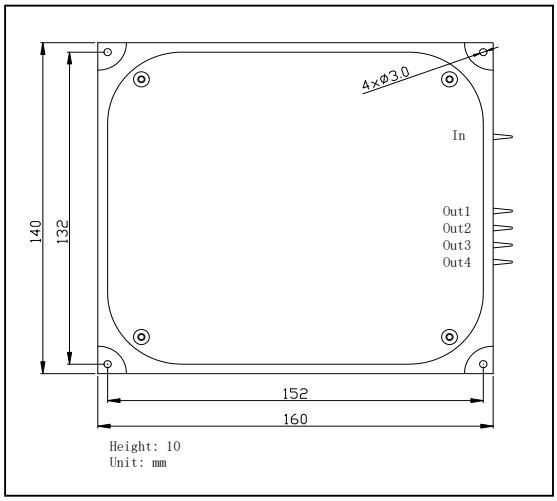


## Ordering Information

**PMFCM**-①①-②②②②-③③-④-⑤-⑥-⑦-⑧⑧-⑨⑨

①①: Center Wavelength
78 - 780nm
85 - 850nm
SS - Specify

②②②②: Potrs Configuration
0104 - 1x4

③③: Splitting Ratio
BA - Balance

④: Working Axis
F - Fast Axis Blocked

⑤: Connector Type
1B - FC/UPC
2B - FC/APC
3D - SC/UPC
4D - SC/APC
N - None
S - Specify

⑥: Fiber Jacket Type
B - Bare Fiber
C - 900um Loose Tube (Red)
S - Specify

⑦: Fiber Length
0.8 - 0.8m
S - Specify

⑧⑧: Fiber Type
5A - PM850 Fiber
S - Specify

⑨⑨: Package Dimensions
67 - 160x140x10mm

# Polarization Maintaining Filter Coupler Module 10xxnm 500mW

Spec Review No.: CAT-09-020C

**Specifications**

| Parameters | Unit | 1x4 | 1x8 |
|---|---|---|---|
| Center Wavelength | nm | 1030, 1064 | |
| Operating Wavelength Range | nm | ±20 | |
| Insertion Loss | dB | ≤8, Typ. 7.5 | ≤11.5, Typ. 11 |
| Wavelength Dependent Loss | dB | ≤0.5, Typ. 0.3 | ≤0.5, Typ. 0.3 |
| Ports IL Uniformity | dB | ≤0.8 | ≤1.0 |
| Return Loss | dB | ≥50 | ≥50 |
| Directivity | dB | ≥50 | ≥45 |
| Extinction Ratio(only for B Type) | dB | ≥20 | ≥17 |
| Extinction Ratio(only for F Type) | dB | ≥23 | ≥23 |
| Temperature Dependent Loss | dB/℃ | ≤0.006 | ≤0.008 |
| Fiber Type | | PM Panda Fiber | |
| Operating Temperature | ℃ | -5 to+70 | |
| Storage Temperature | ℃ | -40 to +85 | |
| Package Dimensions | mm | 160*140*10, or Specify | 160*160*10, or Specify |

*Above specifications are for module without connector.

*For modules with connectors, IL will be 0.5dB higher, RL will be 5dB lower and ER will be 2dB lower.

*The PM fiber and the connector key are aligned to the slow axis.

**Package Dimensions**

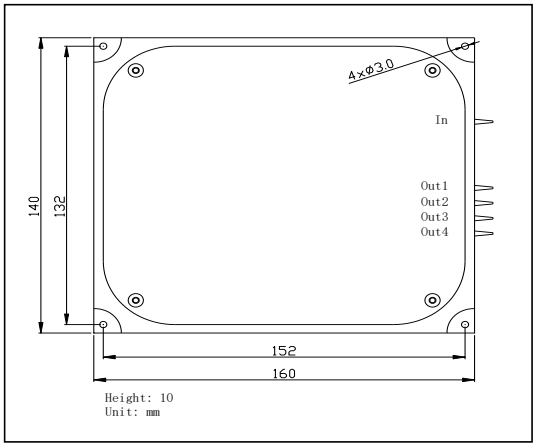


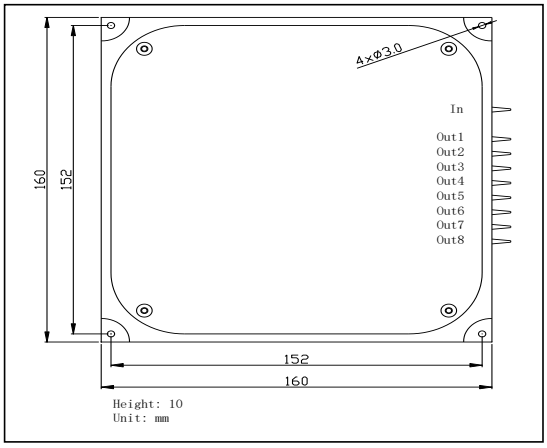


**Ordering Information**

**PMFCM**-①①-②②②②-③③-④-⑤-⑥-⑦-⑧−⑨⑨

①①: Center Wavelength
03 - 1030nm
06 - 1064nm
SS - Specify

②②②②: Potrs Configuration
0104 - 1x4
0108 - 1x8

③③: Splitting Ratio
BA - Balance
SS - Specify

④: Working Axis
F - Fast Axis Blocked
B - Both Axis Working

⑤: Connector Type
1B- FC/UPC
2B - FC/APC
3D - SC/UPC
4D - SC/APC
N - None
S - Specify

⑥: Fiber Type
B - Bare Fiber
C - 900um Losse tube (Red)
D - 900um Losse tube (Blue)
R - 3mm Cable (Blue)
S - Specify

⑦: Fiber Length
0.5 - 0.5m
S - Specify

⑧：Fiber Type
4B - PM980 Fiber
S - Specify

⑨⑨：Package Dimensions
67 - 160x140x10mm
68 - 160x160x10mm
S - Specify

# Planar Lightwave Circuit Splitter 15xxnm 500mW

Spec Review No.: SR2302521A Date: Nov. 23, 2023

## Specifications

| Parameters | Unit | Values | | | |
|---|---|---|---|---|---|
| Port Configuration | - | 1x4 | 1x8 | 1x16 | 1x32 |
| Operating Wavelength | nm | 1260~1650 | | | |
| Max. Insertion Loss | dB | 7.40 | 10.70 | 13.70 | 16.90 |
| Max. Uniformity | dB | 0.60 | 0.80 | 1.00 | 1.50 |
| Max. PDL | dB | 0.10 | 0.10 | 0.20 | 0.25 |
| Min. Return Loss | dB | 50 | | | |
| Min. Directivity | dB | 50 | | | |
| Max. Optical Power (CW) | mW | 300 | | | |
| Max. Tensile Load | N | 5 | | | |
| Operating Temperature | ℃ | -5 to +70 | | | |
| Storage Temperature | ℃ | -40 to +85 | | | |
| Fiber Type | - | SMF-28e Fiber | | | |
| Package Dimension for 250um Bare Fiber (L x W x H) | mm | 40 x 4 x 4 | 40 x 4 x 4 | 50 x 7 x 4 | 50 x 7 x 4 |
| Package Dimension for 900um Loose Tube (L x W x H) | mm | 60 x 7 x 4 | 60 x 7 x 4 | 60 x 12 x 4 | 80 x 20 x 6 |

*Above specifications are for device without connector.

*For devices with connectors, IL will be 0.3dB higher and RL will be 5dB lower.

*The material must be RoHS compliant.

## Package Dimensions

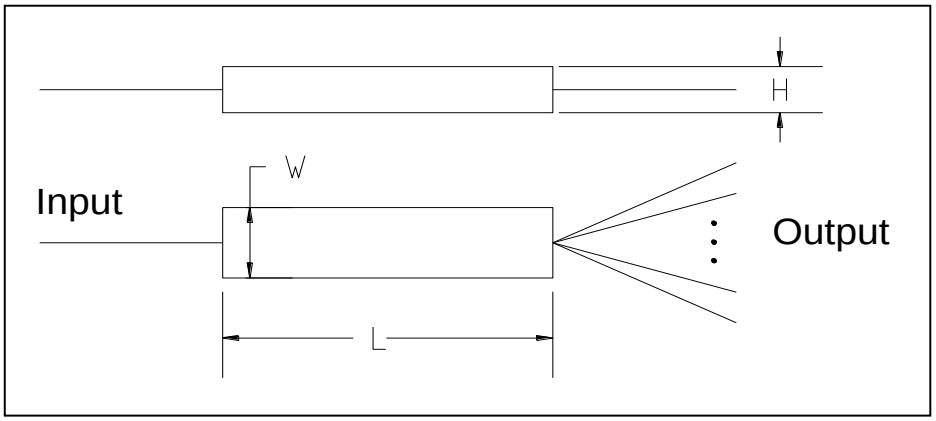


## Ordering information

**PLC**-①①①①-②②②②-③-④-⑤

①①①①: Operating Wavelength
2665 - 1260~1650nm

②②②②: Port Configuration
0104 - 1×4
0108 - 1×8
0116 - 1×16
0132 - 1×32

③: Connector Type on all Ports
1B- FC/UPC
2B - FC/APC
3D - SC/UPC
4D - SC/APC
N - None
S - Specify

④: Fiber Jacket on all Ports
B - 250um Bare Fiber
F - 900um Losse tube (White)
S - Specify

⑤: Fiber Length
1 - 1.0m
S - Specify

# Polarization Maintaining Planar Lightwave Circuit Splitter 15xxnm 500mW

Spec Review No.: SR2209066B Date: Sep. 30, 2022

## Specifications

| Parameters | Unit | Values | | | |
|---|---|---|---|---|---|
| Ports Configuration | - | 1 x 4 | 1 x 8 | 1 x 16 | 1 x 32 |
| Center Wavelength | nm | 1310 or 1550 | | | |
| Operating Wavelength Range | nm | ±30 | | | |
| Max. Insertion Loss, 23℃ | dB | 7.0 | 10.2 | 13.5 | 16.6 |
| Max.Uniformity, 23℃ | dB | 0.4 | 0.4 | 0.6 | 0.8 |
| Min. Extinction Ratio | dB | 20 | 18 | 18 | 18 |
| Min.Return Loss | dB | 50 | | | |
| Min.Directivity | dB | 50 | | | |
| Max. Optical Power (CW, Total) | mW | 300 | | | |
| Tensile Load | N | 5 | | | |
| Fiber Type | - | Corning PM Panda Fiber | | | |
| Operating Temperature | ℃ | -5 to +70 | | | |
| Storage Temperature | ℃ | -40 to +85 | | | |
| Package Dimension for 250um Bare Fiber (L x W x H) | mm | 40 x 4 x 4 | 40 x 4 x 4 | 50 x 7 x 4 | 50 x 7 x 4 |
| Package Dimension for 900um Loose Tube (L x W x H) | mm | 60 x 7 x 4 | 60 x 7 x 4 | 60 x 12 x 4 | 80 x 20 x 6 |

*Above specifications are for module without connector.

*For modules with connectors, IL will be 0.3dB higher, RL will be 5dB lower, and ER will be 2dB lower.

*The PM fiber and the connector key are aligned to the slow axis .

*The material must be RoHS compliant.

## Package Dimensions

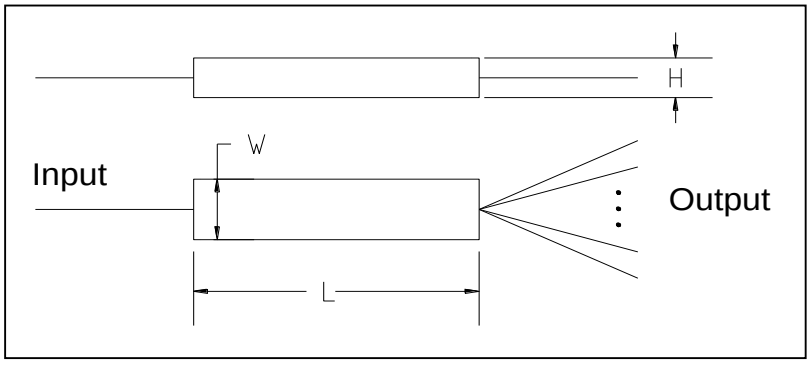


## Ordering Information

**PLC**-①①①①-②②②②-③-④-⑤-⑥

①①①①: Operating Wavelength
31 - 1310nm
55 - 1550nm
SS - Specify

②②②②: Ports Configuration
0104 - 1x4
0108 - 1x8
0116 - 1x16
0132 - 1x32

③: Connector Type
1A- FC/UPC
2A - FC/APC
3D - SC/UPC
4D - SC/APC
N - None
S - Specify

④: Fiber Jacket Type
B - Bare Fiber
C - 900um Losse tube (Red)
D - 900um Losse tube (Blue)
S - Specify

⑤: Fiber Type
2A - PM1550 Fiber
3A - PM1310 Fiber
SS - Specify

⑥: Fiber Length
1 - 1.0m
S - Specify

# Polarization Maintaining Filter Coupler Module 15xxnm 500mW

Spec Review No.: CAT-09-021B

**Specifications**

| Parameters | Unit | 1x4 | 1x8 |
|---|---|---|---|
| Center Wavelength | nm | 1310, 1550 | |
| Operating Wavelength Range | nm | ±30 | |
| Insertion Loss | dB | ≤7.5, Typ. 7.0 | ≤11.0, Typ. 10.5 |
| Wavelength Dependent Loss | dB | ≤0.5, Typ. 0.3 | ≤0.5, Typ. 0.3 |
| Ports IL Uniformity | dB | ≤0.8 | ≤1.0 |
| Return Loss | dB | ≥50 | ≥50 |
| Directivity | dB | ≥50 | ≥45 |
| Extinction Ratio(only for B Type) | dB | ≥20 | ≥17 |
| Extinction Ratio(only for F Type) | dB | ≥23 | ≥23 |
| Temperature Dependent Loss | dB/℃ | ≤0.006 | ≤0.008 |
| Fiber Type | | PM Panda Fiber | |
| Operating Temperature | ℃ | -5 to+70 | |
| Storage Temperature | ℃ | -40 to +85 | |
| Package Dimensions | mm | 160*140*10, or Specify | 160*160*10, or Specify |

*Above specifications are for module without connector.

*For modules with connectors, IL will be 0.3dB higher, RL will be 5dB lower and ER will be 2dB lower.

*The PM fiber and the connector key are aligned to the slow axis.

**Package Dimensions**

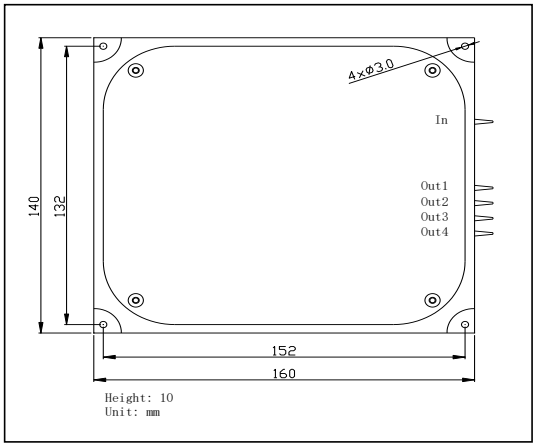


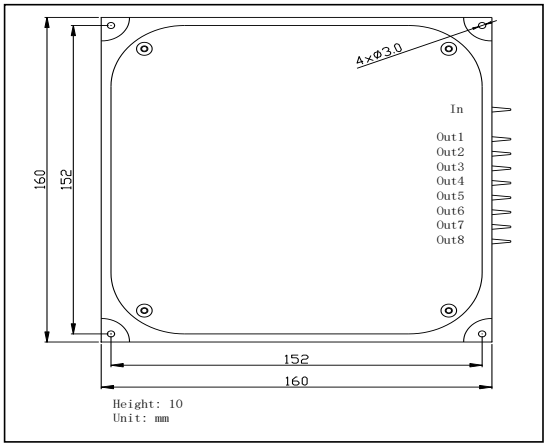


**Ordering Information**

**PMFCM**-①①-②②②②-③③-④-⑤-⑥-⑦-⑧-⑨⑨

①①: Center Wavelength
31 - 1310nm
55 - 1550nm
SS - Specify

②②②②: Potrs Configuration
0104 - 1x4
0108 - 1x8

③③: Splitting Ratio
BA - Balance
SS - Specify

④: Working Axis
F - Fast Axis Blocked
B - Both Axis Working

⑤: Connector Type
1B- FC/UPC
2B - FC/APC
3D - SC/UPC
4D - SC/APC
N - None
S - Specify

⑥: Fiber Type
B - Bare Fiber
C - 900um Losse tube (Red)
D - 900um Losse tube (Blue)
R - 3mm Cable (Blue)
S - Specify

⑦: Fiber Length
0.5 - 0.5m
S - Specify

⑧：Fiber Type
2B - PM1550 Fiber
3B - PM1310 Fiber
S - Specify

⑨⑨：Package Dimensions
67 - 160x140x10mm
68 - 160x160x10mm
S - Specify

# Optizone Technology (Shenzhen) Limited

Optizone | Pursue for Excellence in Optics
Website: www.optizonetech.com
E-mail: garysun@optizonetech.com (Domestic/Overseas)
jerryzhou@optizonetech.com (Domestic)
amandagong@optizonetech.com (Overseas)
Tel: 0755-27995900
Address: Liutao Industrial, 201 Guihua Road, Guanlan,
Longhua District, Shenzhen, China